DEALER SERVICE MANUAL

IS600Z Series

Zero-Turn Riding Mower

Model	Description
5901244	IS600ZB2748 ANSI EXP, Zero-Turn Rider with 48” Mower Deck
5901245	IS600ZB2744 ANSI EXP, Zero-Turn Rider with 44” Mower Deck
5901255	IS600ZB2544 ANSI EXP, Zero-Turn Rider with 44” Mower Deck
5901256	IS600ZB2548 ANSI EXP, Zero-Turn Rider with 48” Mower Deck
5901309	IS600ZB2544RDCE, Zero-Turn Rider with 44” Rear Discharge Mower Deck

BRIGGS & STRATTON POWER PRODUCTS GROUP, LLC
5375 NORTH MAIN STREET
MUNNSVILLE NY 13409
800 933 6175

5103891
Rev A

Table of Contents:

Products Covered by This Manual....3
Identification Tag Location....3
Product Identification Tag (Stamped)....3
CE Identification Tag Markings - EN 836....3
Operator Safety....4
California Prop 65 Exhaust Chemical Warning....11
Safety Decals....11
Safety Icons....12
Safety Alert Symbol and Signal Words....13
Safety Interlock System....13
Features and Controls....13
Control Functions and Locations....13
Operation....15
Before First Time Operation....15
Checks Before Starting....15
Starting the Engine....16
Stopping the Rider....16
Zero-Turn Driving Practice....16
Mowing....18
Mowing Recommendations....18
Pushing the Rider by Hand....20
CE Units Equipped with Folding ROPS....20
Attaching a Trailer....21
Storage....21
Maintenance Schedule....22
Maintenance Procedures....23
Checking / Adding Fuel....23
Replacing the Fuel Filter....23
Check Engine Oil Level....23
Changing the Engine Oil and Filter....23
Engine Maintenance....24
Inspect Muffler and Spark Arrester....24
Check / Fill Transmission Oil....24
Transmission Oil Filter Change....24
Lubrication....25
Lubricate the Front Casters....25
Servicing the Mower Blades....26
Seat Adjustment....27
Ground Speed Control Lever Adjustment....27
Speed Balancing Adjustment....28
Checking Tire Pressures....28
Foot Pedal Adjustment....28
Floor Pan Removal & Installation....28
Seat Plate Locking Retainer (CE Export Units)....29
Neutral Adjustment....29
Return-to-Neutral Adjustment....30
Parking Brake Adjustment....30
Deck Lift Rod Timing Adjustment....31
Deck Leveling Adjustment....32
Mower Drive Belt Replacement....33
Transmission Drive Belt Replacement....34
Rear Suspension Adjustment....34
Battery Maintenance....35
Battery Service....35
Troubleshooting....37
Troubleshooting Charts....37
Troubleshooting Common Cutting Problems....38
Specifications....39
Warranty....41
Warranty Statement....41
Briggs & Stratton Emissions Warranty....42

Not for Reproduction

Thank you for purchasing this quality-built Ferris Commerical Zero Turn Mower. We're pleased that you've placed your confidence in the Ferris brand. When operated and maintained according to the manuals, your Ferris product will provide many years of dependable service.

The manuals contain safety information to make you aware of the hazards and risks associated with the unit and how to avoid them. This Commerical Zero Turn Mower was designed to be used as described in operator's manual and is not intended for any other purpose. It is important that you read and understand the instructions thoroughly before attempting to start or operate this equipment. Save these original instructions for future reference.

This product requires final assembly before use. Refer to the setup guide for instructions on final assembly procedures. Follow the instructions completely.

Products Covered by This Manual

The following products are covered by this manual:

5901244 5901245

The images in this document are representative, and are meant to compliment the instructional copy they accompany. Your unit may vary from the images displayed. *LEFT* and *RIGHT* are as seen from the operator's position.

© Briggs & Stratton Corporation, Milwaukee, WI, USA. All rights reserved.

Ferris is a trademark of Briggs & Stratton Power Products Group, LLC

Briggs & Stratton Power Products Group, LLC.

5375 N. Main Street

Munnsville, NY 13409-4003

(800) 933-6175

ferrisindustries.com

Identification Tag Location

The Product Identification tag (A, Figure 1) can be found in the location shown.

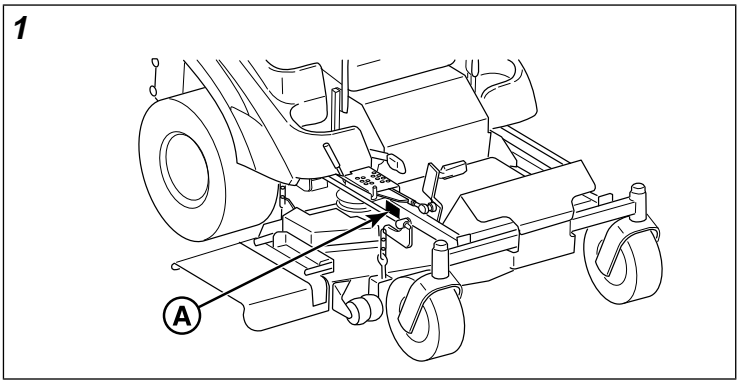

Product Identification Tag (Stamped)

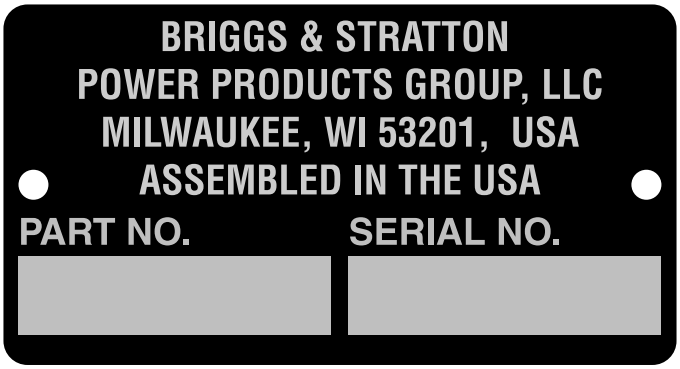

PRODUCT REFERENCE DATA	
Unit Model Number:	
Unit Serial Number:	
Mower Deck Model Number:	
Mower Deck Serial Number:	
Dealer Name:	
Date Purchased:	
ENGINE REFERENCE DATA	
Engine Make:	
Engine Model:	
Engine Type/Spec:	
Engine Code/Serial Number	

When contacting your authorized dealer for replacement parts, service, or information you MUST have these numbers.

The Illustrated Parts List for this machine can be downloaded from ferrisindustries.com. Please provide model and serial number when ordering replacement parts.

CE Identification Tag Markings - EN 836

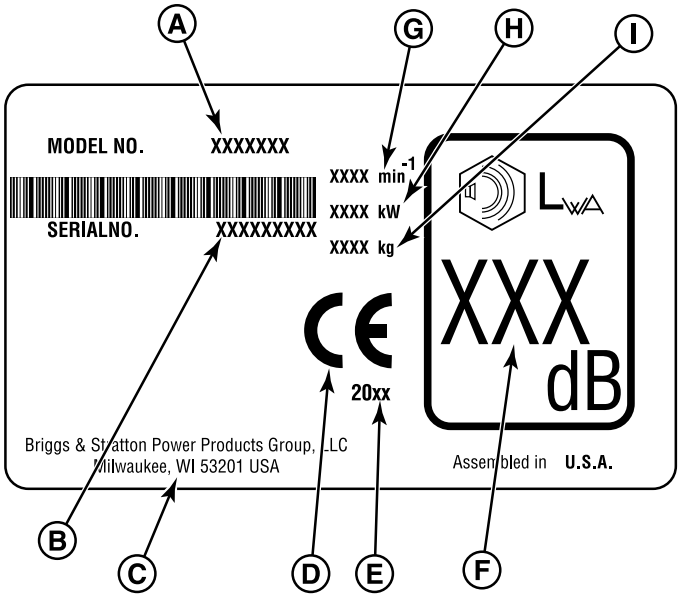

A.	Manufacturer's Identification Number

Not for Reproduction

B.	Serial Number
C.	Manufacturer's Address
D.	CE Compliance Logo
E.	Year of Manufacture
F.	Sound Power in Decibels*
G.	Maximum Engine Speed in Rotations per Minute
H.	Power Ratings in Kilowatts
I.	Mass of Unit in Kilograms

This unit complies with European Harmonized Lawn Mower Standard EN 836, European Machinery Directive 2006/42/EC, and European EMC Directive 2004/108/EEC.

*Tested according to 2000/14/EC

*"**Vibration measurement uncertainty** - machine vibration was recorded using methods and procedures outlined in the appropriate International Standards in effect at the time of manufacture. The uncertainties due to the measurement may result in a variance of up to 5% from the published value shown in the Declaration of Conformity."*

Operator Safety

Read these safety rules and follow them closely. Failure to obey these rules could result in loss of control of unit, severe personal injury or death to you, or bystanders, or damage to property or equipment. **This mowing deck is capable of amputating hands and feet and throwing objects.**

The safety alert triangle ⚠ in text signifies important cautions or warnings which must be followed.

Operating Safety

Congratulations on purchasing a superior-quality piece of lawn and garden equipment. Our products are designed and manufactured to meet or exceed all industry standards for safety.

Do not operate this machine unless you have been trained. Reading and understanding this operator's manual is a way to train yourself.

Power equipment is only as safe as the operator. If it is misused, or not properly maintained, it can be dangerous! Remember, you are responsible for your safety and that of those around you.

Use common sense, and think through what you are doing. If you are not sure that the task you are about to perform can be safely done with the equipment you have chosen, ask a professional: contact your local authorized dealer.

Read the Manual

The operator's manual contains important safety information you need to be aware of BEFORE you operate your unit as well as DURING operation.

Safe operating techniques, an explanation of the product's features and controls, and maintenance information is included to help you get the most out of your equipment investment.

Be sure to completely read the Safety Rules and Information found on the following pages. Also completely read the Operation section.

Children

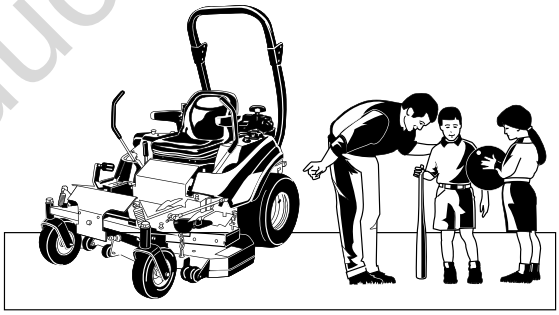

Tragic accidents can occur with children. Do not allow them anywhere near the area of operation. Children are often attracted to the unit and mowing activity. Never assume that children will remain where you last saw them. If there is a risk that children may enter the area where you are mowing, have another responsible adult watch them.

Not for Reproduction

Slope Operation

Operation on slopes can be dangerous. Using the unit on a slope that is too steep where you do not have adequate wheel traction (and control) can cause sliding, loss of steering, control, and possible rollover. You should not operate on a slope greater than a 5.4 foot rise over a 20 foot length (15 degrees).

Always mow across slopes, not up and down (to maintain traction on the wheels) and avoid sudden turns or rapid speed changes. Reduce speed and use extreme caution on ALL slopes.

Also, note that the surface condition you are on can greatly impact your ability to safely operate this machine. Operating on wet or slippery slopes can cause sliding and loss of steering and control. Do not operate on slopes that are slippery, wet, or have soft soil conditions.

If you feel unsure about operating the unit on a slope, don't do it. It's not worth the risk.

Thrown Objects

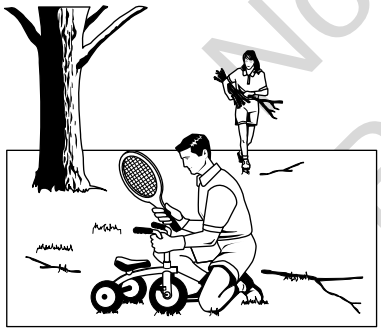

This unit has spinning mower blades. These blades can pick up and throw debris that could seriously injure a bystander. Be sure to clean up the area to be mowed and remove objects that could be thrown by the blade BEFORE you start mowing.

Do not operate this unit without the entire grass catcher or discharge guard (deflector) in place.

Also, do not allow anyone in the area while the unit is running! If someone does enter the area, shut the unit off immediately until they leave.

Moving Parts

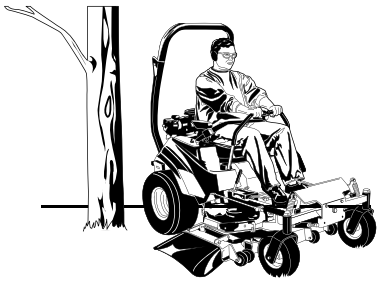

This equipment has many moving parts that can injure you or someone else. However, if you stay in the operator zone (stay seated in the seat), and follow the safety rules in this operator's manual, the unit is safe to operate.

The mower deck has spinning mower blades that can amputate hands and feet. Do not allow anyone near the unit while it is running! Keep safety devices (guards, shields, and switches) in place and working.

To help you, the operator, use this equipment safely, it is equipped with an operator-present safety system. Do NOT attempt to alter or bypass the system. See your dealer immediately if the system does not pass all the safety interlock system tests found in this manual.

Roll Bar Use (For Models Equipped with a Rigid Roll Bar)

Keep the roll bar in position and fasten the seat belt. Do not jump off if the mower tips (it is safer to be secured by the seat belt.)

NEVER remove the roll bar.

Roll Bar Use (For Models Equipped with a Folding Roll Bar)

Keep the roll bar in the raised position and fasten the seat belt. There is no roll over protection when the roll bar is down! Do not jump off if the mower tips (it is safer to be secured by the seat belt with the roll bar raised.)

Not for Reproduction

Lower the roll bar only when necessary (such as to temporarily clear a low overhanging obstacle) and NEVER remove it. Do NOT use the seat belt when the roll bar is down. Raise the roll bar as soon as clearance permits.

Retaining Walls, Drop-Offs and Water

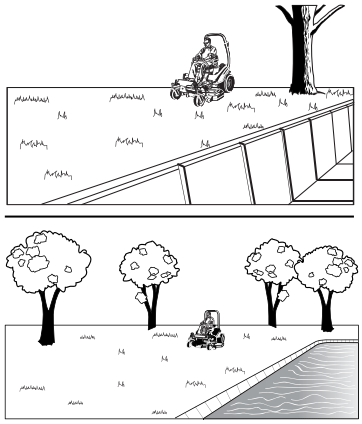

Retaining walls and drop-offs around steps and water are a common hazard. Give yourself a minimum of two mower widths of clearance around these hazards and hand-trim with a walk behind mower or string trimmer. Wheels dropping over retaining walls, edges, ditches, embankments, or into water can cause rollovers, which may result in serious injury, death, or drowning.

Overhead Obstacles

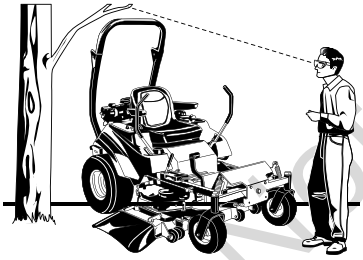

Check for overhead clearances before driving under any objects. Do not allow the roll bar to contact low overhanging obstacles such as tree branches and guide wires.

Fuel and Maintenance

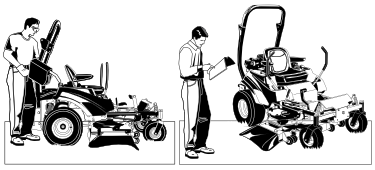

Always disengage all drives, shutoff the engine, and remove the key before doing any cleaning, refueling, or servicing.

Gasoline and its vapors are extremely flammable. Do not smoke while operating or refueling. Do not add fuel while engine is hot or running. Allow engine to cool for at least 3 minutes prior to adding fuel.

Do not add fuel indoors, in an enclosed trailer, garage, or any other enclosed area that is not well ventilated. Gasoline spills should be cleaned up promptly and before operation begins.

Gasoline should be stored only in sealed containers approved for fuel.

Proper maintenance is critical to the safety and performance of your unit. Keep the unit free of grass, leaves, and excess oil. Be sure to perform the maintenance procedures listed in this manual, especially periodically testing the safety system.

Enclosed Areas

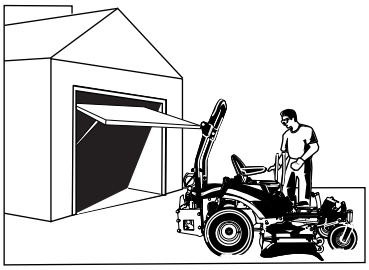

Only operate this unit outdoors and away from unventilated areas such as inside garages or enclosed trailers. The engine emits poisonous carbon monoxide gas and prolonged exposure in an enclosed area can result in serious injury or death.

Training

- Read, understand, and follow all instructions in the manual and on the unit before starting. If the operator(s) or mechanic(s) can not read English it is the owner's responsibility to explain this material to them.
- Become familiar with the safe operation of the equipment, operator controls, and safety signs.
- All operators and mechanics should be trained. The owner is responsible for training the users.
- Only allow responsible adults, who are familiar with the instructions, to operate the unit.
- Never let children or untrained people operate or service the equipment. Local regulations may restrict the age of the operator.
- The owner/user can prevent and is responsible for accidents or injuries occurring to themselves, other people or property.
- Data indicates that operators, age 60 years and above, are involved in a large percentage of riding mower-related injuries. These operators should evaluate their ability to operate the riding mower safely enough to protect themselves and others from serious injury.

Preparation

- Evaluate the terrain to determine what accessories and attachments are needed to properly and safely perform the job. Use only accessories and attachments approved by the manufacturer.
- Wear appropriate clothing including safety shoes, safety glasses and ear protection. Long hair, loose clothing or jewelry may get tangled in moving parts.

Not for Reproduction

- Inspect the area where the equipment is to be used and remove all objects such as rocks, toys and wire, which can be thrown by the machine.
- Use extra care when handling gasoline and other fuels. They are flammable and vapors are explosive.
- Use only an approved container.
- Never remove fuel cap or add fuel with the engine running. Allow engine to cool before refueling. Do not smoke.
- Never refuel or drain the machine indoors.
- Check that operator's presence controls, safety switches and shields are attached and functioning properly. Do not operate unless they are functioning properly.

Operation

- Never run an engine in an enclosed area.
- Mow only in the daylight or with good artificial light, keeping away from holes and hidden hazards.
- Be sure all drives are in neutral and parking brake is engaged before starting engine. Only start engine from the operator's position. Use seat belts if provided.
- Be sure of your footing while using pedestrian controlled equipment, especially when backing up. Walk, don't run. Reduced footing could cause slipping.
- Slow down and use extra care on hillsides. Be sure to travel in the recommended direction on hillsides. Turf conditions can affect the machines stability. Use caution when operating near drop-offs.
- Do not mow in reverse unless absolutely necessary. Always look down and behind before and while traveling in reverse.
- Be aware of the mower discharge direction and do not point it at anyone. Do not operate the mower without either the entire grass catcher or the deflector in place.
- Slow down and use caution when making turns and when changing directions on slopes.
- Never raise deck with the blades running.
- Never leave a running unit unattended. Always disengage the PTO, set parking brake, stop engine, and remove keys before dismounting. Keep hands and feet away from the cutting units.
- Turn off the PTO switch to disengage the blades when not mowing.
- Never operate with guards not securely in place. Be sure all interlocks are attached, adjusted properly and functioning properly.
- Never operate with the discharge deflector raised, removed or altered, unless using a grass catcher.
- Do not change the engine governor setting or over-speed the engine.
- Stop on level ground, lower implements, disengage drives, engage parking brake, shut off engine before leaving the operator's position for any reason including emptying the grass catchers or unclogging the chute.
- Stop equipment and inspect blades after striking objects or abnormal vibration occurs. Make necessary repairs before resuming operations.
- Keep hands and feet away from the cutting units.
- Look behind and down before backing up to be sure of a clear path.
- Never carry passengers and keep pets and bystanders away.
- Do not operate the unit while under the influence of alcohol or drugs.
- Slow down and use caution when making turns and crossing roads and sidewalks. Stop blades if not mowing.
- Use care when loading or unloading the machine into a trailer or truck.
- Use care when approaching blind corners, shrubs, trees or other objects that may obscure vision.
- To reduce fire hazard, keep unit free of grass, leaves & excess oil. Do not stop or park over dry leaves, grass or combustible materials.

WARNING

It is a violation of California Public Resource Code, Section 4442, to use or operate the engine on any forest-covered, brush-covered or grass-covered land unless the exhaust system is equipped with a spark arrester, as defined in Section 4442, maintained in effective working order. Other states or federal jurisdictions may have similar laws. Contact an Authorized Service Dealer to obtain a spark arrester designed for the exhaust system installed on this engine.

- OSHA regulations may require the use of hearing protection when exposed to sound levels greater than 85 dBA for an 8 hour time period.

CAUTION

This machine produces sound levels in excess of 85 dBA at the operator's ear and can cause hearing loss though extended periods of exposure.

Wear hearing protection when operating this machine.

Slope Operation

Slopes are a major factor related to loss-of-control and tip-over accidents, which can result in severe injury or death. All slopes require extra caution. If you cannot back up the slope or if you feel uneasy on it, do not drive on it.

Not for Reproduction

WARNING

Do not use this machine on slopes greater than 15°.*

Select slow ground speed before driving onto slope. Use extra caution when operating on slopes with rear-mounted grass catchers.

Mow across the face of slopes, not up and down, use caution when changing directions and DO NOT START OR STOP ON SLOPE.

* This limit was determined per CEN Standard EN 836:1997, Section 5.2.2 and is based on the EN 836 Stability Test procedure described in Section 4.2.4.2. The 15 degree "limit of stability" is equal to 50% of the angle at which machine lift-off occurred in static tests. Actual dynamic stability may vary depending on operating conditions.

Do:

- Mow across slopes, not up and down.
- Remove obstacles such as rocks, tree limbs, etc.
- Watch for holes, ruts, or bumps. Uneven terrain could overturn the unit. Tall grass can hide obstacles.
- Use slow speed. Choose a slow speed so that you will not have to stop or change speed while on the slope.
- Use extra care with grass catchers or other attachments. These can change the stability of the unit.
- Keep all movement on the slopes slow and gradual. Do not make sudden changes in speed or direction.
- See your authorized dealer for recommendations of available weights to improve stability.

Do NOT:

- Avoid starting, stopping, or turning on a slope. If tires lose traction (i.e. machine stops forward motion on a slope), disengage the blade(s) (PTO) and drive slow off the slope.
- Do not turn on slopes unless necessary, and then, turn slowly and gradually uphill, if possible. Never mow down slopes.
- Do not mow near drop-offs, ditches, or embankments. The operator could lose footing or balance or mower could suddenly turn over if a wheel is over the edge of a cliff or ditch, or if an edge caves in.
- Do not mow on wet grass. Reduced footing or traction could cause sliding.
- Do not try to stabilize the unit by putting your foot on the ground. (ride-on units).
- Do not mow excessively steep slopes.
- Do not use grass catcher on steep slopes.
- Do not mow slopes if you cannot back up them.

Towed Equipment (Ride-On Units)

- Tow only with a machine that has a hitch designed for towing. Do not attach towed equipment except at the hitch point.
- Follow the manufacturer's recommendations for weight limit for towed equipment and towing on slopes. See attaching a trailer under OPERATION.
- Never allow children or others in or on towed equipment.
- On slopes, the weight of the towed equipment may cause loss of traction and loss of control.
- Travel slowly and allow extra distance to stop.
- Do not shift to neutral and coast down hill.

Children

Tragic accidents can occur if the operator is not alert to the presence of children. Children are often attracted to the unit and the mowing activity. Never assume that children will remain where you last saw them.

- Keep children out of the mowing area and under the watchful care of another responsible adult.
- Be alert and turn unit off if children enter the area.
- Before and during reverse operation, look behind and down for small children.
- Never carry children, even with the blade(s) off. They may fall off and be seriously injured or interfere with safe unit operation. Children who have been given rides in the past may suddenly appear in the mowing area for another ride and be run over or backed over by the machine.
- Never allow children to operate the unit.
- Use extra care when approaching blind corners, shrubs, trees, or other objects that may obscure vision.

Emissions

- Engine exhaust from this product contains chemicals known, in certain quantities, to cause cancer, birth defects, or other reproductive harm.
- Look for the relevant Emissions Durability Period and Air Index information on the engine emissions label.

Ignition Systems (Gasoline Models)

- This spark ignition system complies with Canadian ICES-002.

Service and Maintenance

To avoid personal injury or property damage, use extreme care in handling gasoline. Gasoline is extremely flammable and the vapors are explosive.

Safe Handling of Gasoline

- Extinguish all cigarettes, cigars, pipes, and other sources of ignition.

Not for Reproduction

- Use only approved gasoline containers.
- Never remove the gas cap or add fuel with the engine running. Allow the engine to cool before refueling.
- Never fuel the machine indoors.
- Never store the machine or fuel container where there is an open flame, spark, or pilot light such as near a water heater or other appliance.
- Never fill containers inside a vehicle or on a truck bed with a plastic bed liner. Always place containers on the ground away from your vehicle before filling.
- Remove gas-powered equipment from the truck or trailer and refuel it on the ground. If this is not possible, then refuel such equipment on a trailer with a portable container, rather than from a gasoline dispenser nozzle.
- Keep nozzle in contact with the rim of the fuel tank or container opening at all times until fueling is complete. Do not use a nozzle lock-open device.
- If fuel is spilled on clothing, change clothing immediately.
- Never over-fill the fuel tank. Replace gas cap and tighten securely.
- Use extra care in handling gasoline and other fuels. They are flammable and vapors are explosive.
- If fuel is spilled, do not attempt to start the engine but move the machine away from the area of spillage and avoid creating any source of ignition until fuel vapors have dissipated.
- Replace all fuel tank caps and fuel container caps securely.

Maintenance and Storage

- Always observe safe refueling and fuel handling practices when refueling the unit after transportation or storage.
- Always follow the engine manual instructions for storage preparations before storing the unit for both short and long term periods.
- Always follow the engine manual instructions for proper start-up procedures when returning the unit to service.
- Never store the machine or fuel container inside where there is an open flame, such as in a water heater. Allow unit to cool before storing.
- Shut off fuel while storing or transporting. Do not store fuel near flames or drain indoors.
- Keep all hardware, especially blade attachment bolts, tight and keep all parts in good working condition. Replace all worn or damaged decals.
- Never tamper with safety devices. Check their proper operation regularly.
- Disengage drives, lower implement, set parking brake, stop engine and remove key or disconnect spark plug wire. Wait for all movement to stop before adjusting, cleaning or repairing.
- Clean grass and debris from cutting units, drives, mufflers, and engine to prevent fires. Clean up oil or fuel spillage.
- Let engine cool before storing and do not store near flame.
- Stop and inspect the equipment if you strike an object. Repair, if necessary, before restarting.
- Park machine on level ground. Never allow untrained personnel to service machine.
- Use jack stands to support components when required.
- Carefully release pressure from components with stored energy.
- Disconnect battery or remove spark plug wire before making any repairs. Disconnect the negative terminal first and the positive last. Reconnect positive first and negative last.
- Use care when checking blades. Wrap the blade(s) or wear gloves, and use caution when servicing them. Only replace blades. Never straighten or weld them.
- Keep hands and feet away from moving parts. If possible, do not make adjustments with the engine running.
- Charge batteries in an open well ventilated area, away from spark and flames. Unplug charger before connecting or disconnecting from battery. Wear protective clothes and use insulated tools.
- Grass catcher components are subject to wear, damage, and deterioration, which could expose moving parts or allow objects to be thrown. Frequently check components and replace with manufacturer's recommended parts, when necessary.
- Check brake operation frequently. Adjust and service as required.
- Use only factory authorized replacement parts when making repairs.
- Always comply with factory specifications on all settings and adjustments.
- Only authorized service locations should be utilized for major service and repair requirements.
- Never attempt to make major repairs on this unit unless you have been properly trained. Improper service procedures can result in hazardous operation, equipment damage and voiding of manufacturer's warranty.
- Units with hydraulic pumps, hoses, or motors: WARNING: Hydraulic fluid escaping under pressure may have sufficient force to penetrate skin and cause serious injury. If foreign fluid is injected into the skin it must be surgically removed within a few hours by a doctor familiar with this form of injury or gangrene may result. Keep body and hands away from pin holes or nozzles that eject hydraulic fluid under high pressure. Use paper or cardboard, and not hands, to search for leaks. Make sure all hydraulic fluid connections are tight and all hydraulic hoses and lines are in good condition before applying pressure to the system. If leaks occur, have the unit serviced immediately by your authorized dealer.
- WARNING: Stored energy device. Improper release of springs can result in serious personal injury. Springs should be removed by an authorized technician.

Not for Reproduction

- Models equipped with an engine radiator: WARNING: Stored energy device. To prevent serious bodily injury from hot coolant or steam blow-out, never attempt to remove the radiator cap while the engine is running. Stop the engine and wait until it is cool. Even then, use extreme care when removing the cap.

Roll Bar Instructions

For models equipped with factory-installed Roll Over Protection System (ROPS).

WARNING

In order to avoid serious injury or death from roll over, it is important to follow the warnings listed below.

Operational Warnings

(Specific to Units Equipped with a Rigid Roll Bar):

- Always use the seat belt when the roll bar is in position.

(Specific to Units Equipped with a Folding Roll Bar):

- Always use the seat belt when the roll bar is in the raised position.
- Never use the seat belt when the roll bar is in the down position.
- Remember there is no roll over protection when the roll bar is in the down position so it is very important to always keep the roll bar in the raised position whenever possible.
- Lower the roll bar to the down position only when it is absolutely necessary.

(All Models):

- Check for overhead clearances before driving under any objects. Do not allow roll bar to contact low overhanging obstacles such as tree branches and guide wires.
- Never remove the roll bar from the vehicle.
- Do not exceed the machine weight rating of the roll bar.
- Read and follow all of the instructions shown below regarding the inspection and maintenance of the roll bar structure and the seat belt.

Inspection of the Roll Bar Protective Structure

WARNING

Failure to properly inspect and maintain the ROLL BAR protective structure can cause serious injury or death.

A ROLL BAR, like any other safety device, needs to be periodically inspected to verify that the integrity of the device has not been compromised through normal machine use, misuse, age degradation, modifications, or a roll over.

To maintain operator roll over protection and roll bar effectiveness:

- If a ROLL BAR becomes damaged for any reason, such as a collision, roll over, or impact, the ROLL BAR must be replaced. Small undetectable cracks can reduce the effectiveness of the ROLL BAR. Never weld, straighten, or repair the ROLL BAR.
- Never alter the ROLL BAR by welding anything to it or by drilling additional holes.
- BEFORE FIRST TIME USE - Inspect the ROLL BAR structure and mounting hardware for:
  1) Check to make sure the machine GVW (Gross Vehicle Weight), including attachments, restrained payload, fuel and operator, is not in excess of the maximum weight specified on the ROLL BAR label.

  2) Make sure there isn't any missing, damaged, or loose mounting hardware.

  3) Make sure the ROLL BAR has been correctly and completely installed.

- EVERY 100 HOURS - Inspect the ROLL BAR structure and mounting hardware for:
  1) Any cracks in the structure (structural members and/or welds).

  2) Significant corrosion on any part of the ROLL BAR structure or hardware.

  3) Missing, damaged, or loose mounting hardware.

  4) Mounting hardware that is of a grade less than specified.

  5) Machine GVW (Gross Vehicle Weight), including attachments, restrained payload, fuel, and operator, in excess of the maximum weight specified on the ROLL BAR label.

  6) Any modifications that have been made, such as unauthorized welds and holes.

  7) Any permanent deformation or twisting of the ROLL BAR structure.

  8) That the ROLL BAR label is still in place and is readable.

  9) That the ROLL BAR on-product warning labels are still on the ROLL BAR and are readable.

- If there is any doubt as to the condition of the ROLL BAR, remove the machine from service and contact your dealer for assistance.

Inspection and Maintenance of the Roll Bar Seat Belt

WARNING

Failure to properly inspect and maintain the seat belt can cause serious injury or death.

Not for Reproduction

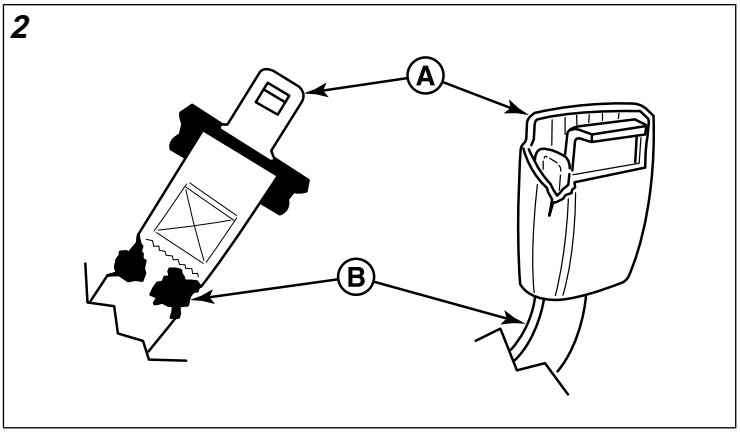

- The seat belt like the ROLL BAR, needs to be periodically inspected to verify that the integrity has not been compromised through normal machine use, misuse, age degradation, modifications, or a roll over. If the seat belt does not pass all of the following tests, it should be replaced.
- BEFORE EACH USE – Conduct the following inspections/maintenance of the seat belt and retraction mechanism:
  1) Check for dirt or debris in the retraction mechanism. If dirt or debris is found, it should be removed.

  2) Check to make sure the retraction mechanism retracts easily and completely.

  3) Check for damage to any part of the seat belt (A, Figure 2) such as nicks, cuts, loose stitching, or fraying.

  4) Check that the buckle and latch (B) operate properly and that the latch plate is not excessively worn, deformed, or the buckle is damaged or cracked. The seat belt should latch and release easily.

California Prop 65 Exhaust Chemical Warning

WARNING

U.S.A. Models: The engine exhaust from this product contains chemicals known to the State of California to cause cancer, birth defects, or other reproductive harm.

WARNING

Battery posts, terminals, and related accessories contain lead and lead compounds, chemicals known to the State of California to cause cancer and birth defects or other reproductive harm. Wash hands after handling.

Safety Decals

Before operating your unit, read the safety decals. The cautions and warnings are for your safety. To avoid a personal injury or damage to the unit, understand and follow all safety decals.

WARNING

If any safety decals become worn or damaged, and cannot be read, order replacement decals from your local dealer.

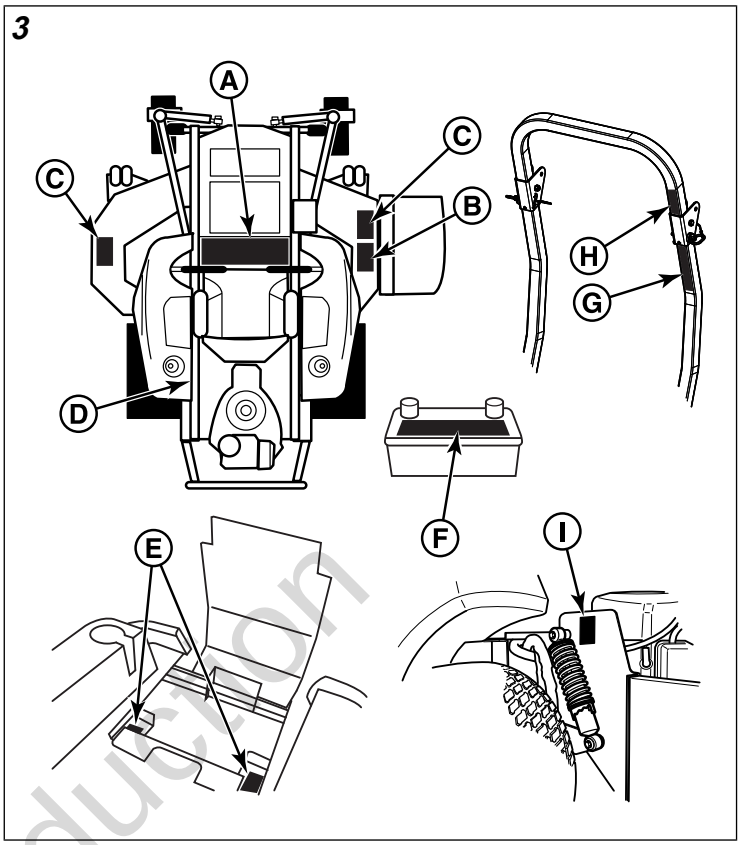

A	
B	
C	
D	
E	

Not for Reproduction

F	

G		H	
		I	

Safety Icons

	Warning: Read and understand the Operator's Manual before using this machine. Know the location and function of all controls. Do not operate this machine unless you are trained.
	Warning: Consult technical literature before performing technical repairs or maintenance. When leaving the machine, shutoff engine, set the parking brake to the lock position and remove the ignition key.
	Danger - Amputation and dismemberment hazard: To avoid injury from rotating blades and moving parts, keep safety devices (guards, shields and switches) in place and working.
	Danger - Loss of traction, sliding, steering and control on slopes hazard: If machine stops forward motion or starts sliding on a slope, stop the blades and drive slowly off the slope.
	Danger - Amputation hazard: Do not mow when children or others are around. Never carry riders especially, children even with the blades off. Do not mow in reverse unless absolutely necessary. Look down and behind – before and while backing.

	Danger - Tipping and slipping hazard: Mow across slopes, not up and down. Do not operate on slopes over 15 degrees. Avoid sudden and sharp (fast) turns while on slopes. This limit was determined per CEN Standard EN 836:1997, Section 5.2.2 and is based on the EN 836 Stability Test procedure described in Section 4.2.4.2. The 15 degree "limit of stability" is equal to 50% of the angle at which machine lift-off occurred in static tests. Actual dynamic stability may vary depending on operating conditions.
	Danger - Thrown objects hazard: Keep bystanders and children a safe distance away. Remove objects that can be thrown by the blade. Do not mow without discharge chute in place.
	Danger - Thrown Objects Hazard: Do not mow without discharge chute or entire grass catcher in place.
	Danger - Amputation and Thrown Objects Hazard: To avoid injury from rotating blades, stay clear of deck edge and keep others away.
	Danger: Fire Hazard: Keep unit free of grass, leaves and excess oil. Do not add fuel while engine is hot or running. Stop engine, remove key and allow to cool for at least 3 minutes prior to adding fuel. Do not add fuel indoors, in an enclosed trailer, garage or other enclosed areas. Clean up spilled fuel. Do not smoke while operating this machine.

	Danger: Dismemberment - This machine can crush and cut. Keep hands away from belts and pulleys.

	Warning: Avoid Serious Injury or Death from Roll Over - Keep roll bar in the raised position and use seat belt. There is no roll over protection when roll bar is down. Lower roll bar only when necessary and NEVER remove it. Raise the roll bar as soon as clearance permits.
	Warning: Avoid Serious Injury or Death from Roll Over - Keep roll bar in the raised position and use seat belt. Do NOT use seat belt when the roll bar is down.
	Warning: Avoid Serious Injury or Death from Roll Over - Do NOT jump off if the mower tips. Read and follow all operating instructions and warnings in the operator's manual.

Not for reproduction

	Warning: Low Overhanging Obstacles Hazard - Check for overhead clearances before driving under any objects. Stay clear. Do NOT allow roll bar to contact low overhanging obstacles, such as tree branches and guide wires. Read and follow all operating instructions and warnings in the operator's manual.

	Warning: Fire Hazard - Keep children, open flames and sparks away from the battery, which could ignite explosive gases.
	Warning: Sulfuric acid can cause blindness or severe burns - Always wear safety goggles or a face shield when working on or near a battery.
	Warning: Batteries produce explosive gases - Read and understand the Operator's Manual before using this machine.
	Important: Do not discard a battery in the trash - Contact local authorities for disposal and/or recycling of batteries.

Safety Alert Symbol and Signal Words

The safety alert symbol indicates ⚠ a potential personal injury hazard. A signal word (DANGER, WARNING, or CAUTION) is used with the alert symbol to designate a degree or level of hazard seriousness. A safety symbol may be used to represent the type of hazard. The signal word NOTICE is used to address practices not related to personal injury.

⚠ **DANGER** indicates a hazard which, if not avoided, *will* result in death or serious injury.

⚠ **WARNING** indicates a hazard which, if not avoided, *could* result in death or serious injury.

⚠ **CAUTION** indicates a hazard which, if not avoided, *could* result in minor or moderate injury.

NOTICE indicates an action that could result in damage to the product.

Safety Interlock System

This unit is equipped with safety interlock switches. These safety systems are present for your safety, do not attempt to bypass safety switches, and never tamper with safety devices. Check their operation regularly.

Operational SAFETY Checks

Test 1 - Engine SHOULD NOT crank if:

- PTO switch is engaged, OR
- Parking brake is not engaged, OR
- Ground speed control levers are not in the NEUTRAL position.

Test 2 - Engine SHOULD crank if:

- PTO switch is not engaged, AND
- Parking brake is engaged, AND
- Ground speed control levers are locked in the NEUTRAL position.

Test 3 - Engine should SHUT OFF if:

- Operator rises off seat with PTO engaged, OR
- Operator rises off seat with parking brake disengaged.
- Operator moves ground speed control levers out of their neutral positions before disengaging parking brake.

Test 4 - Blade Brake Check

Mower blades and mower drive belt should come to a complete stop within seven (7) seconds after electric PTO switch is turned off (or operator rises off seat). If mower drive belt does not stop within seven (7) seconds, see your dealer.

NOTE: Once the engine has stopped, PTO switch must be turned off, parking brake must be engaged, and the ground speed control levers must be locked in the NEUTRAL position after the operator returns to the seat in order to start the engine.

⚠ **WARNING**

If the unit does not pass a safety test, do not operate it. See your authorized dealer. Under no circumstance should you attempt to defeat the purpose of safety interlock system.

Features and Controls

Control Functions and Locations

The information below briefly describes the function of individual controls. Starting, stopping, driving, and mowing require the combined use of several controls applied in specific sequences. To learn what combination and sequence of controls to use for various tasks see the *Operation* section.

Not for Reproduction

Tractor Controls

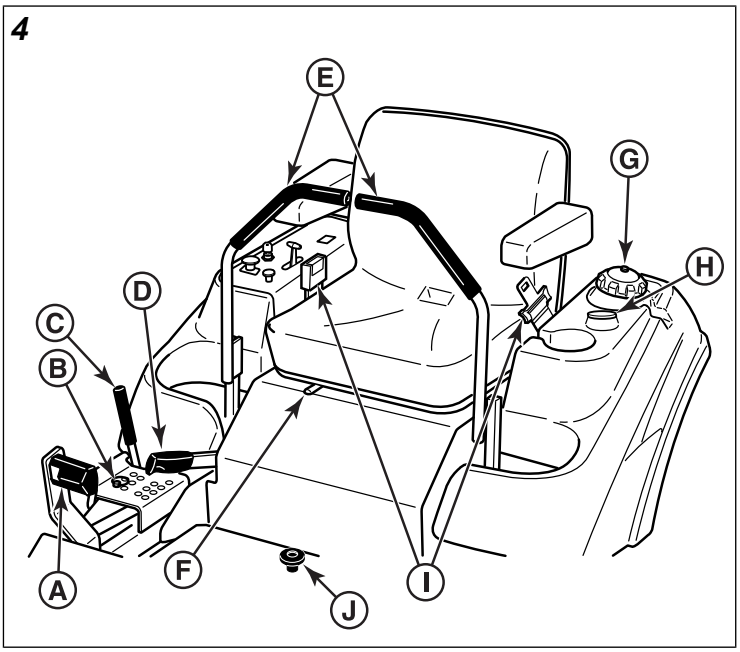

Callout	Control Name
A	Deck Lift Pedal
B	Cutting Height Adjustment Pin
C	Deck Lift Lock Lever
D	Parking Brake
E	Ground Speed Control Levers
F	Seat Adjustment Lever
G	Fuel Tank Cap
H	Fuel Level Guage
I	Retractable Seat Belt
J	Removable Floor Plate

Deck Lift Pedal, Cutting Height Adjustment Pin & Deck Lift Lock Lever: These control the cutting height of the mower deck. Depress the pedal until it locks into the 4-1/2" (11.4 cm) position. Place the adjustment pin in the desired cutting height and release the lift lock lever.

	Cutting Height Adjustment Pin
	Deck Lift Lock Lever

Parking Brake: Pull the parking brake lever back to engage the parking brake. Move the lever fully forward to disengage the parking brake.

NOTE: To start the unit the parking brake must be engaged.

	Disengage	Releases the parking brake.
	Engage	Locks the parking brake.

Ground Speed Control Levers: These levers control the ground speed of the rider. The left lever controls the left rear drive wheel and the right lever controls the right rear drive wheel.

	FORWARD
N	NEUTRAL
	REVERSE

Moving a lever forward increases the FORWARD speed of the associated wheel, and pulling back on a lever increases the REVERSE speed.

Note: The further a lever is moved away from the neutral position the faster the drive wheel will turn.

See the *Zero-Turn Driving Practice* section for steering instructions.

Seat Adjustment Lever: The seat can be adjusted forward and back. Move the lever towards the left, position the seat as desired, and release the lever to lock the seat in position.

Fuel Tank Cap: To remove the cap, turn counter-clockwise.

Fuel Level Gauge: Displays the fuel level in the tank.

Retractable Seat Belt: The seat belt is used to secure the operator to the seat.

The seat belt should **always** be worn when using this equipment with a Roll Bar.

Removable Floor Plate: The floor plate can be removed for easy access to the mower deck. To remove the plate, remove the retainer hardware and tilt the floor pan up and then remove from the machine. Reverse the process for re-installation.

Instrument Control Panel

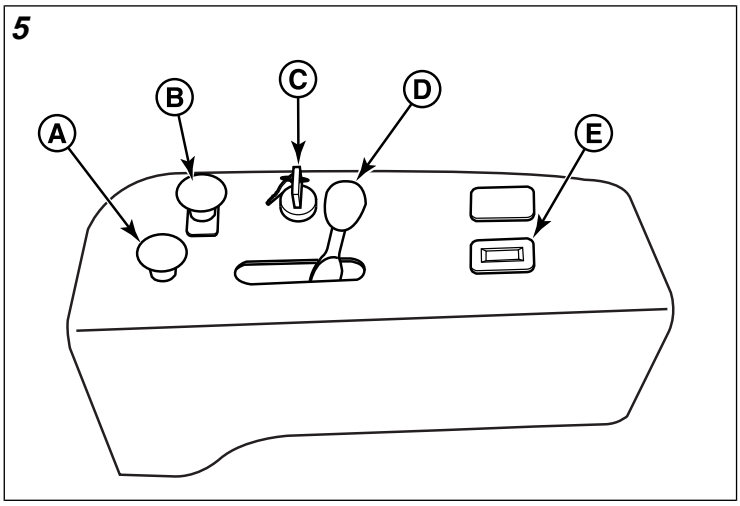

Callout	Control Name

Not for Reproduction

A	Choke
B	PTO Switch
C	Ignition Switch
D	Throttle Control
E	Hour Meter

Choke: Close the choke for cold starting. Open the choke once the engine starts. A warm engine may not require choking. Pull the knob UP to close the choke. Push the knob DOWN to open the choke.

PTO (Power Take Off) Switch: The PTO switch engages and disengages the mower. Pull UP on the switch to engage, and push DOWN to disengage.

Ignition Switch: The ignition switch starts and stops the engine, it has three positions:

	OFF	Stops the engine and shuts off the electrical system.
	RUN	Allows the engine to run and powers the electrical system.
	START	Cranks the engine for starting.

NOTE: Never leave the ignition switch in the RUN position with the engine stopped—this drains the battery.

Throttle Control: The throttle controls engine speed. Move the throttle forward to increase engine speed and back to decrease engine speed. Always operate at FULL throttle.

	Fast throttle speed.
	Slow throttle speed.

Hour Meter: The hour meter measures the number of hours the PTO has been engaged. The hour meter has a self contained power source so the total hours are always visible.

Operation

Before First Time Operation

- Be sure to read all information in the Safety and Operation sections before attempting to operate this tractor and mower.
- Become familiar with all of the controls and how to stop the unit.
- Drive in an open area without mowing to become accustomed to the unit.

WARNING

- Never operate on slopes greater than 15°.
- Select slow ground speed before driving onto a slope. Use extra caution when operating on slopes with a rear-mounted grass catcher.
- Mow across the face of slopes, not up and down, use caution when changing direction on slopes and **do NOT start or stop on a slope.**

WARNING

- Never allow passengers to ride on the unit.
- Before leaving the operator's position for any reason, engage the parking brake, disengage the PTO, stop the engine and remove the key.
- To reduce fire hazard, keep the engine, rider and mower free of grass, leaves and excess grease. Do NOT stop or park rider over dry leaves, grass or combustible materials.
- Fuel is highly flammable and must be handled with care. Never fill the tank when the engine is still hot from recent operation. Do NOT allow open flame, smoking or matches in the area. Avoid over-filling and wipe up any spills.

WARNING

Do NOT load this zero-turn rider on a trailer or truck using two separate ramps. Only use a single ramp that is at least one foot wider than the width of the rear wheels of this rider. This rider has a zero turning radius and the rear wheels could fall off the ramps, or the rider could tip over injuring the operator or bystanders.

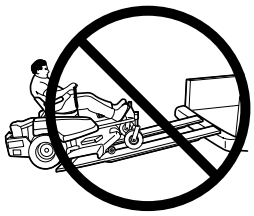

Checks Before Starting

- Check that the crankcase is filled to the full mark on the crankcase oil fill and dipstick. If necessary, add oil through the engine oil fill. See the engine Operator's manual for instructions, engine oil dipstick location and oil recommendations.
- Make sure all nuts, bolts, screws and pins are in place and tight.
- Adjust the seat position, and make certain you can reach all the controls from operator's position.
- Fill the fuel tank with fresh fuel. Refer to engine manual for fuel recommendations.

Not for Reproduction

- Check the hydraulic oil level.

Starting the Engine

WARNING

- If you do not understand how a specific control functions, or have not yet thoroughly read the *Features & Controls* section, do so now.
- Do NOT attempt to operate the tractor without first becoming familiar with the location and function of all controls.

1. While sitting in the operator's seat, engage the parking brake and make sure the PTO switch is disengaged and the ground speed control levers are locked in the neutral position.
2. **A warm engine may not require choking.** Set the engine throttle control to FAST throttle position. Then fully close the choke by pulling the knob OUT fully.
3. Insert the key into the ignition switch and turn it to START.
4. After the engine starts, gradually open the choke (push knob down fully). Reduce to half throttle speed and allow engine to warm. *Warm up the engine by running it for atleast a minute before engaging the PTO switch or driving the rider.*
5. After warming the engine always operate the unit at FULL throttle when mowing.

In the event of an emergency the engine can be stopped by simply turning the ignition switch to STOP. Use this method only in emergency situations. For normal engine shut down follow the procedure given in *Stopping the Rider*.

Stopping the Rider

1. Returning the ground speed control levers to the middle position will stop rider movement. Pivot the levers outward and lock them in NEUTRAL.
2. Disengage the PTO by pushing down on the PTO switch.
3. Engage the parking brake by pulling the handle up until it locks into position.
4. Move the throttle control to mid-throttle position and turn the ignition key to OFF. Remove the key.

Zero-Turn Driving Practice

The lever controls of the Zero Turn rider are responsive, and learning to gain a smooth and efficient control of the rider's forward, reverse, and turning movements will take some practice.

Spending some time going through the maneuvers shown and becoming familiar with how the unit accelerates, travels, and steers — before you begin mowing —is absolutely essential to getting the most out of the Zero Turn rider.

Locate a smooth, flat area of your lawn — one with plenty of room to maneuver. (Clear the area of objects, people and animals before you begin.) Operate the unit at mid-throttle during this practice session (ALWAYS operate at full throttle when mowing), and turn slowly to prevent tire slippage and damage to your lawn.

We suggest you begin with the Smooth Travel procedure to the right, and then advance through the forward, reverse, and turning maneuvers.

You must release the parking brake prior to moving the control levers inward.

Smooth Travel

The lever controls of the Zero Turn rider are responsive.

The BEST method of handling the ground speed control levers is in three steps — as shown in Figure 6.

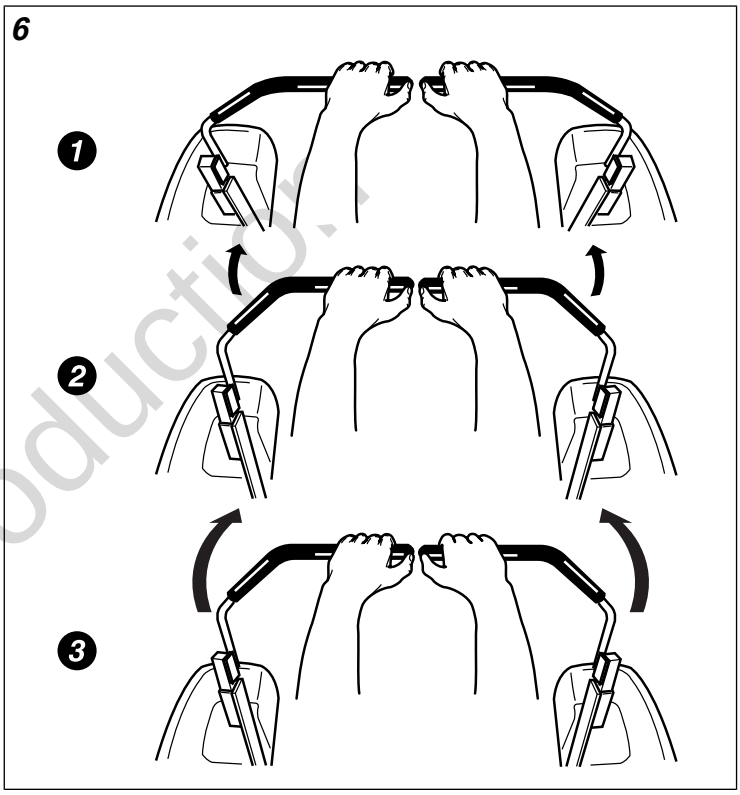

FIRST place your hands onto the levers as shown.

SECOND, to go forward gradually push the levers forward with your palms.

THIRD, to speed up move the levers farther forward. To slow down smoothly, slowly move the levers toward neutral.

Basic Driving

Forward Travel Practice

Not for Reproduction

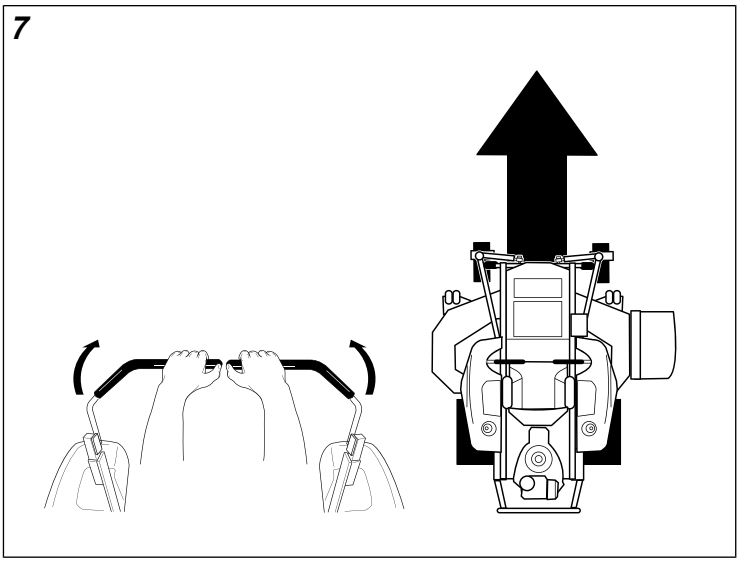

Gradually move both ground speed control levers — evenly FORWARD from neutral. Slow down and repeat.

NOTE: Straight forward travel takes practice. If necessary, top speed can be balance-adjusted — see the Speed Balancing Adjustment in the Adjustments section near the back of this manual.

Reverse Travel Practice

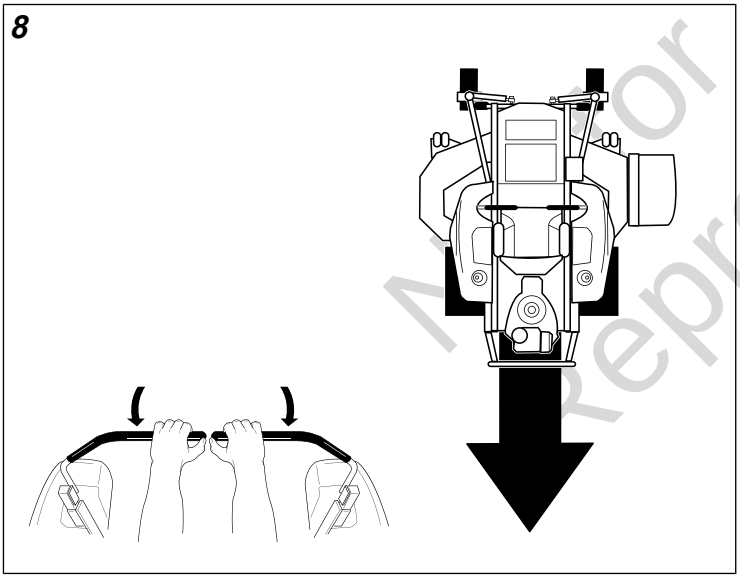

LOOK DOWN & BEHIND, then gradually move both ground speed control levers evenly BACK from neutral. Slow down and repeat.

NOTE: Practice backing up for several minutes before attempting to do so near objects. The rider turns sharply in reverse as well as forward, and backing up straight takes practice.

Practice Turning Around A Corner

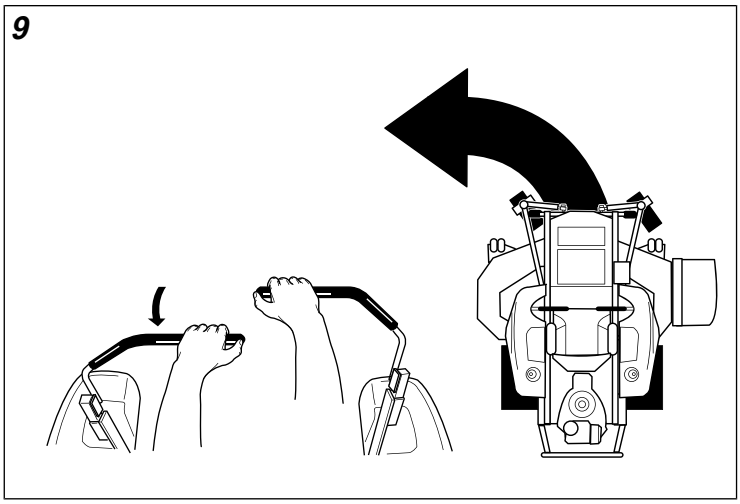

While traveling forward allow one handle to gradually return back toward neutral. Repeat several times.

NOTE: To prevent pivoting directly on the tire tread, it is best to keep both wheels going at least slightly forward.

Practice Turning in Place

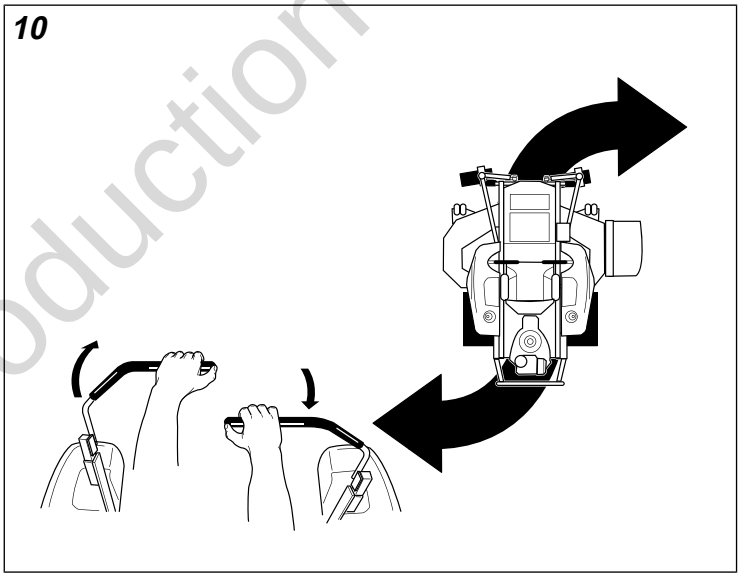

To turn in place, “Zero Turn,” gradually move one ground speed control lever forward from neutral and one lever back from neutral simultaneously. Repeat several times.

NOTE: Changing the amount each lever is pulled—forward or back, changes the “pivot point” you turn on.

Advanced Driving

Executing an End-Of-Row Zero Turn

Not for Reproduction

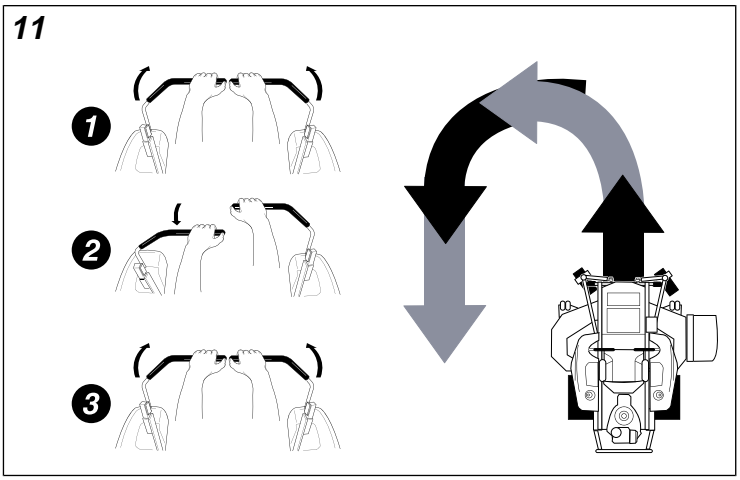

Your Zero Turn Rider's unique ability to turn in place allows you to turn around at the end of a cutting row rather than having to stop and Y-turn before starting a new row.

For example, to execute a left end-of row zero turn:

1. Slow down at the end of the row.
2. Move the RIGHT ground speed control lever forward slightly while moving the LEFT ground speed control lever back to center and then slightly back from center.
3. Begin mowing forward again.

This technique turns the rider LEFT and slightly overlaps the row just cut —eliminating the need to back up and re-cut missed grass.

As you become more familiar and experienced with operating the Zero Turn rider, you will learn more maneuvers that will make your mowing time easier and more enjoyable.

Remember, the more you practice, the better your control of the Zero Turn will be!

Mowing

1. Engage the parking brake. Make sure that the PTO switch is disengaged, the ground speed control levers are locked in the NEUTRAL position and the operator is in the seat.
2. Start the engine. See *Starting the Engine*.
3. Set the mower cutting height.
4. Set the throttle to FULL.
5. Engage the PTO by pulling up on the PTO switch.
6. Begin mowing.
7. When finished, shut off the PTO.
8. Stop the engine. See *Stopping the Rider*.

Mowing Recommendations

Several factors can affect how well your machine cuts grass, Following proper mowing recommendations can improve the performance and life of your machine.

Height of Grass

Often cutting height is a matter of personal preference. Typically, you should mow the grass when it is between three and five inches high. The proper cutting height range for a specific lawn will depend upon several factors, including the type of grass, the amount of rainfall, the prevailing temperature, and the lawn's overall condition.

Cutting the grass too short causes weak, thin grass plants, which are easily damaged by dry periods and pests. Cutting too short is often more damaging than allowing the grass to be slightly higher.

Letting grass grow a bit longer—especially when it is hot and dry—reduces heat build-up, preserves needed moisture and protects the grass from heat damage and other problems. However, allowing grass to grow too high can cause thin turf and additional problems.

Cutting off too much at one time shocks the plant's growth system and weakens the grass plants. **A good rule of thumb is the 1/3 rule: to cut no more than one third of the grass height, and never more than 1 inch at a time.**

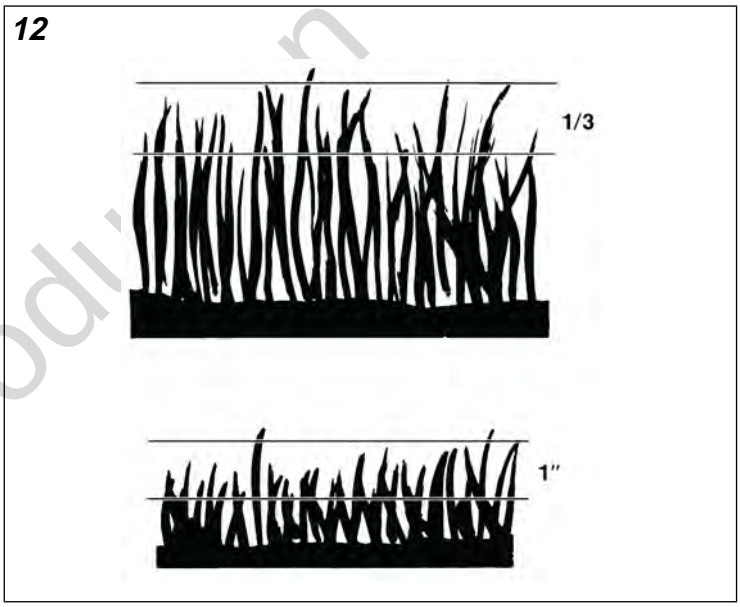

The amount of grass you are able to cut in one pass is also effected by the type of mowing system you are using (for example, broadcasting with side discharge decks can process a much larger volume of grass than mulching does).

Tall grass requires incremental cutting. For extremely tall grass, set the cutting height at maximum for the first pass (A, Figure 13), and then reset it to the desired height and mow a second (B) or third time.

Don't cover the grass surface with a heavy layer of clippings. Consider using a grass collection system and starting a compost pile.

Not for Reproduction

13

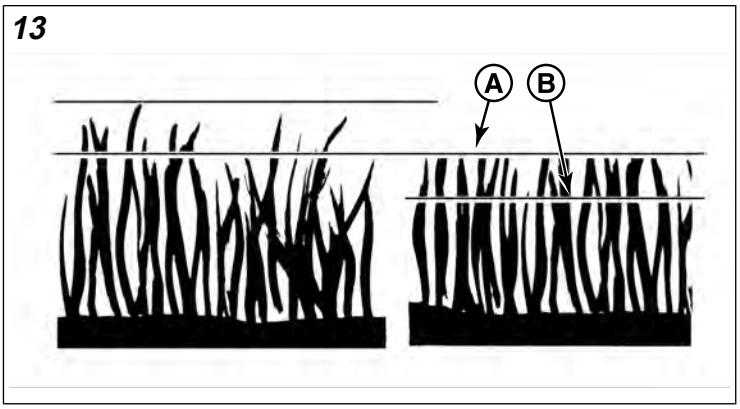

When and How Often to Mow

The time of day and condition of the grass greatly affect the results you'll get when mowing. For the best results, follow these guidelines:

- Mow when the grass is between three and five inches high.
- Mow with sharp blades. Short clippings of grass one inch or shorter decompose more quickly than longer blades. Sharp mower blades cut grass cleanly and efficiently, preventing frayed edges which harm the grass.
- Mow at time of day when the grass is cool and dry. Late afternoon or early evening often provide these ideal mowing conditions.
- Avoid mowing after rain or even heavy dew, and never mulch when the grass is wet (moist grass does not mulch well, and clumps beneath the mower deck).

Mowing Patterns

Always start mowing on a smooth, level area.

The size and type of area to be mowed will determine the best mowing pattern to use. Obstructions such as trees, fences and buildings, and conditions such as slopes and grades must also be considered.

- Cut long straight strips overlapping slightly.
- Where possible, change patterns occasionally to eliminate matting, graining or a corrugated appearance.
- For a truly professional cut, mow across the lawn in one direction, then re-cut the lawn by mowing perpendicular to the previous cut.

NOTE: Always operate the engine at FULL THROTTLE when mowing.

If you hear the engine slowing down, you are mowing too fast—using a slower ground speed will improve the cutting efficiency of the blades and prevents many common cutting problems. Use an appropriate ground speed for the thickness and height of the grass you are cutting (3rd gear or slower for manual gear models). If you hear the engine slowing down you are mowing too fast, use a slower ground speed.

14

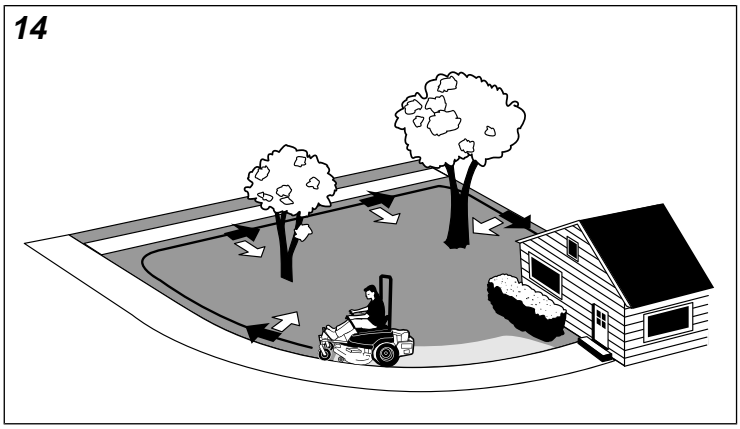

Where possible, make one or two passes around the outside of the area discharging the grass INTO the lawn to keep the cut grass off fences and walks.

15

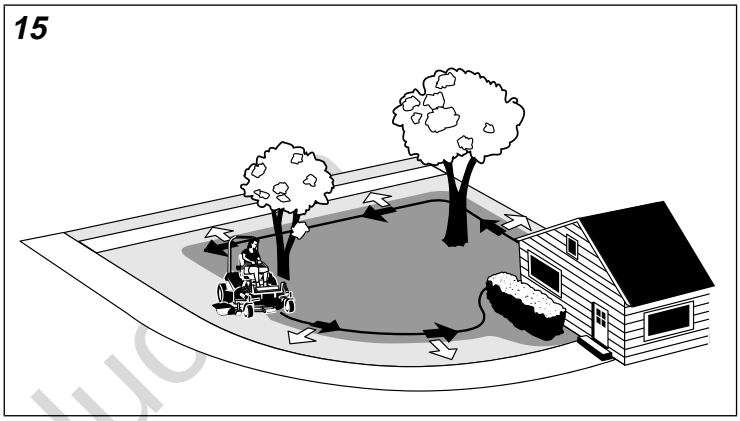

The remainder of the mowing should be done in the opposite direction so that the clippings are dispersed OUT onto the area of lawn previously cut.

Mowing Methods

Broadcast Mowing

Broadcasting, or side-discharging, disperses fine clippings evenly over the entire lawn. Many golf courses use this method. Your mower has a deep dish deck to allow freer circulation of clippings so they are broadcast evenly over the lawn.

Engine Speed & Ground Speed for Broadcasting:

Always operate the engine at full throttle when mowing. If you hear the engine slowing down, you are mowing too fast—using a slower ground speed will improve the cutting efficiency of the blades and prevents many common cutting problems.

ALWAYS use an appropriate ground speed for the thickness and height of the grass you are cutting (3rd gear or slower for manual gear models). If you hear the engine slowing down you are mowing too fast, use a slower ground speed.

How Much Grass to Cut Off When Broadcasting:

Mow when the grass is 3-5 inches long. Do not cut the grass shorter than 2 to 2-1/2 inches. Do not cut off more that 1 inch of grass in a single pass.

Mulching

Not for Reproduction

Mulching consists of a mower deck which cuts and re-cuts clippings into tiny particles and which then blows them down INTO the lawn. These tiny particles decompose rapidly into by-products your lawn can use. UNDER PROPER CONDITIONS, your mulching mower will virtually eliminate noticeable clippings on the lawn surface.

NOTE: When mulching under heavy cutting conditions, a rumbling sound may be present and is normal.

Mulching Requires EXCELLENT Mowing Conditions:

Mulching mowers cannot function properly if the grass is wet, or if the grass is simply to high to cut. Even more than normal mowing, mulching requires that the grass be dry and the appropriate amount is cut.

Do not use the mower as a mulching mower during the first two or three mowings in the spring. The long grass blades, quick growth, and often wetter conditions are more suitable for broadcasting (side-discharging) or grass bagging operation.

Engine Speed & Ground Speed for Mulching:

Use full engine throttle matched with a slow ground speed so that clippings will be finely cut. Ground speed while mulching should be HALF of the speed that would be used when broadcasting (side discharging) under similar conditions. Since mulching requires more horsepower than broadcasting, using a slower ground speed is vitally important for proper mulching operation.

How Much Grass to Mulch:

The best mulching action typically results from cutting only the top ½ inch to 3/4 inch of grass blade. This provides short clippings which decompose properly (much more quickly than longer clippings). The ideal cutting height will vary with climate, time of year, and quality of your lawn. We recommend that you experiment with both the cutting height and ground speed until you achieve the best cut. Start with a high cutting height and using progressively lower settings until you find a cutting height that is matched to your mowing conditions and preferences.

Pushing the Rider by Hand

NOTICE

Do not tow rider.

Towing the unit will will cause transmission damage. Do not use another vehicle to push or pull this unit.

1. Disengage the PTO, engage the parking brake, turn the ignition OFF, and remove the key.
2. Locate the transmission release levers (A, Figure 16) underneath the engine deck of the machine between the two rear wheels on the transmission cradle (B).

16

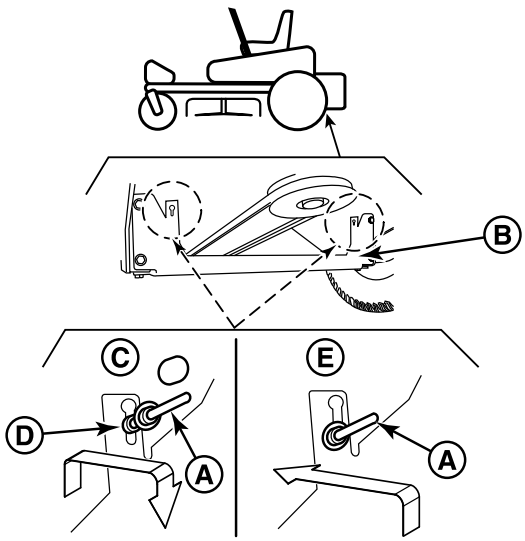

3. To disengage the pumps (free-wheel position) (C), move the transmission release lever up and pull it towards the rear of the machine. When the second nut (D) has passed through the hole, lower the rod down into the slot so it will stay in the disengaged position. Repeat the process for the other side of the unit.
4. Disengage the parking brake. The rider can now be pushed by hand.
5. After moving the unit, re-engage the transmissions (drive position) (E) by raising the transmission release lever so that the back nut clears the slot, push the lever towards the front of the machine. Repeat the process for the other side of the unit.

CE Units Equipped with Folding ROPS

CE export Units are factory equipped with folding ROPS. Follow the safety instructions below if your unit is equipped with the folding ROPS.

Raise and Lower the Roll Bar

WARNING

Avoid serious injury or death from roll over:

- Keep roll bar in the raised position and use seat belt.
- There is no roll over protection when the roll bar is down.
- Lower the rollbar only when necessary and NEVER remove it.
- Do NOT use seat belt when the roll bar is down.
- Raise the roll bar as soon as clearance permits.
- Do NOT jump off if mower tips.

To lower the roll bar:

Not for Reproduction

1. Pull the hair pin clips (A, Figure 17) out of the retainer pins (B).

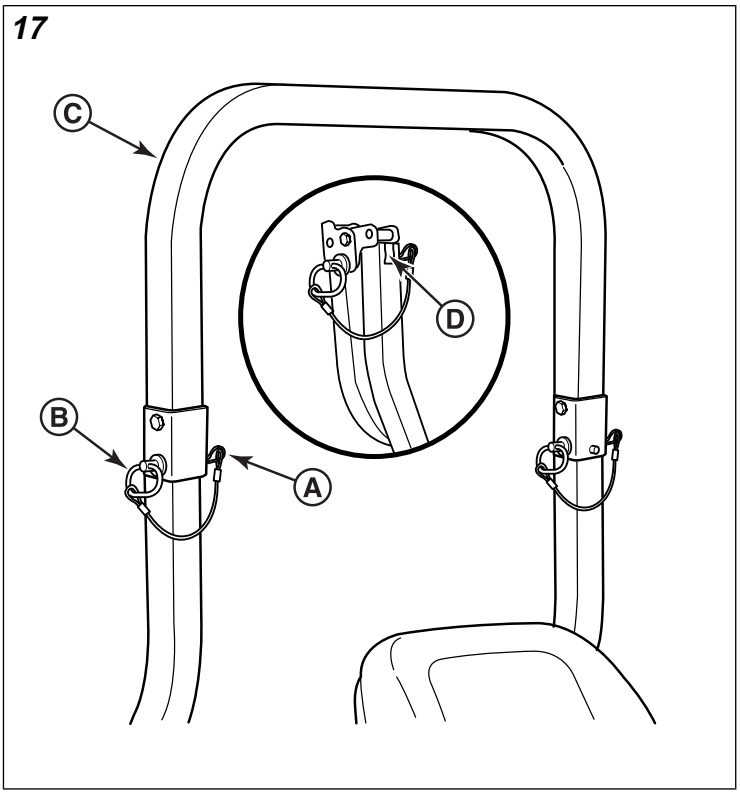

2. Push or pull the top of the roll bar (C) forward against the spring clips (D) and remove the retainer pins (B).
3. Lower the roll bar and reinstall the retainer pins and hair pin clips to secure the roll bar in the down position (see insert, Figure 17).

To raise the roll bar:

1. Pull the hair pin clips (A) out of the retainer pins (B) and remove the retainer pins.
2. Raise the roll bar (C) until the top of the roll bar (C) contacts the spring clips (D) on the upright tubes.
3. Push or pull the top of the roll bar forward against the spring clips and reinstall the retainer pins and hair pin clips to secure the roll bar in the raised position.

Attaching a Trailer

The maximum weight of a towed trailer should be less than 200 lbs (91kg). Secure the trailer with an appropriately sized clevis pin (A, Figure 18) and clip (B).

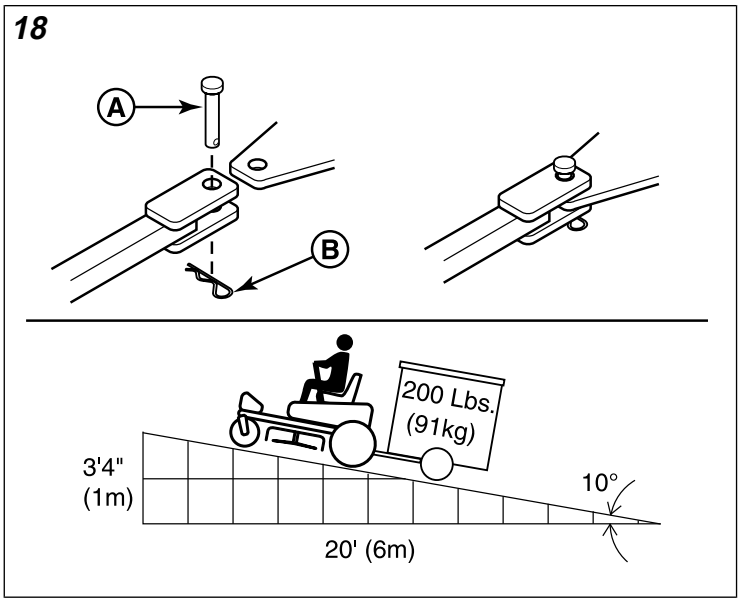

Excessive towed loads can cause loss of traction and loss of control on slopes. Reduce towed weight when operating on slopes. The surface being driven on greatly impacts traction and stability. Wet or slippery surfaces can greatly reduce traction and the ability to stop or turn. Carefully evaluate the surface conditions before operating the unit and trailer, and never operate on slopes greater than 10°. See SLOPE OPERATION and TOWED EQUIPMENT in the safety section of this manual for additional safety information.

Storage

Temporary Storage (30 Days or Less)

Remember, the fuel tank will still contain some gasoline, so never store the unit indoors or in any other area where fuel vapor could travel to any ignition source. Fuel vapor is also toxic if inhaled, so never store the unit in any structure used for human or animal habitation.

WARNING

Never store the unit, with gasoline in engine or fuel tank, in a heated shelter or in enclosed, poorly ventilated enclosures. Gasoline fumes may reach an open flame, spark or pilot light (such as a furnace, water heater, clothes dryer, etc.) and cause an explosion.

Handle gasoline carefully. It is highly flammable and careless use could result in serious fire damage to your person or property.

Drain fuel into an approved container outdoors away from open flame or sparks.

Here is a checklist of things to do when storing your unit temporarily or in between uses:

- Keep the unit in an area away from where children may come into contact with it. If there's any chance of unauthorized use, remove the spark plug (s) and put in a

Not for Reproduction

safe place. Be sure the spark plug opening is protected from foreign objects with a suitable cover.

- If the unit can't be stored on a reasonable level surface, chock the wheels.
- Clean all grass and dirt from the mower.

Long Term Storage (Longer Than 30 Days)

Before you store your unit for the off-season, read the Maintenance and Storage instructions in the Safety Rules section, then perform the following steps:

1. Drain crankcase oil while engine is hot and refill with a grade of oil that will be required when unit is used again.
2. Prepare the mower deck for storage as follows:
   a.) Remove mower deck from the unit.

   b.) Clean underside of mower deck.

   c.) Coat all bare metal surfaces with paint or light coat of oil to prevent rusting.
3. Clean external surfaces and engine.
4. Prepare engine for storage. See engine owner's manual.
5. Clean any dirt or grass from cylinder head cooling fins, engine housing and air cleaner element.
6. Cover air cleaner and exhaust outlet tightly with plastic or other waterproof material to keep out moisture, dirt and insects.
7. Completely grease and oil unit as outlined in the *Lubrication* section.
8. Clean up unit and apply paint or rust preventative to any areas where paint is chipped or damaged.
9. Be sure the battery is filled to the proper level with water and is fully charged. Battery life will be increased if it is removed, put in a cool, dry place and fully charged about once a month. If battery is left in unit, disconnect the negative cable.
10. Drain fuel system completely or add a gasoline stabilizer to the fuel system. If you have chosen to use a fuel stabilizer and have not drained the fuel system, follow all safety instructions and storage precautions in this manual to prevent the possibility of fire from the ignition of gasoline fumes. Remember, gasoline fumes can travel to distant sources of ignition and ignite, causing risk of explosion and fire.
    NOTE: Gasoline, if permitted to stand unused for extended periods (30 days or more), may develop gummy deposits which can adversely affect the engine carburetor and cause engine malfunction. To avoid this condition, add a gasoline stabilizer to the fuel tank and run the engine a few minutes, or drain all fuel from the unit before placing it in storage.

Starting After Long Term Storage

Before starting the unit after it has been stored for a long period of time, perform the following steps.

1. Remove any blocks from under the unit.
2. Install the battery if it was removed.
3. Unplug the exhaust outlet and air cleaner.
4. Fill the fuel tank with fresh gasoline. See engine manual for recommendations.
5. See engine owner's manual and follow all instructions for preparing engine after storage.
6. Check crankcase oil level and add proper oil if necessary. If any condensation has developed during storage, drain crankcase oil and refill.
7. Inflate tires to proper pressure. Check fluid levels.
8. Start the engine and let it run slowly. DO NOT run at high speed immediately after starting. Be sure to run engine only outdoors or in well ventilated area.

Maintenance Schedule

UNIT MAINTENANCE
Before Each Use
Check Safety Interlock System
Check Rider Brakes
Check Rider / Mower for Loose Hardware
Check Hydraulic Oil Level
Every 25 Hours
Clean Deck & Check/Replace Mower Blades*
Lubricate Rider & Mower*
Check Tire Pressures
Every 100 Hours
Check Mower Blade Stopping Time
Clean Battery & Cables
Every 200 Hours
Change Hydraulic Oil & Filter

ENGINE MAINTENANCE
Before Each Use
Check Engine Oil Level
Every 25 Hours
Check/Clean Cooling Fins & Intake*
Every 50 Hours
Check/Clean Spark Arrester**
Refer to Engine Owner's Manual
Service Air Filter
Change Oil & Filter
Check/Replace Spark Plugs
Check/Replace Fuel Filter

*More often in hot (over 85°F, 30°C) weather or dusty operating conditions.
**If equipped, replace if damaged.

Not for Reproduction

Maintenance Procedures

Checking / Adding Fuel

WARNING

Gasoline is highly flammable and must be handled with care. Allow engine to cool for at least 3 minutes before refueling. Do not allow open flame, smoking or matches in the area. Avoid over-filling and wipe up any spills.

To add fuel:

1. Remove the fuel cap (A, Figure 19).

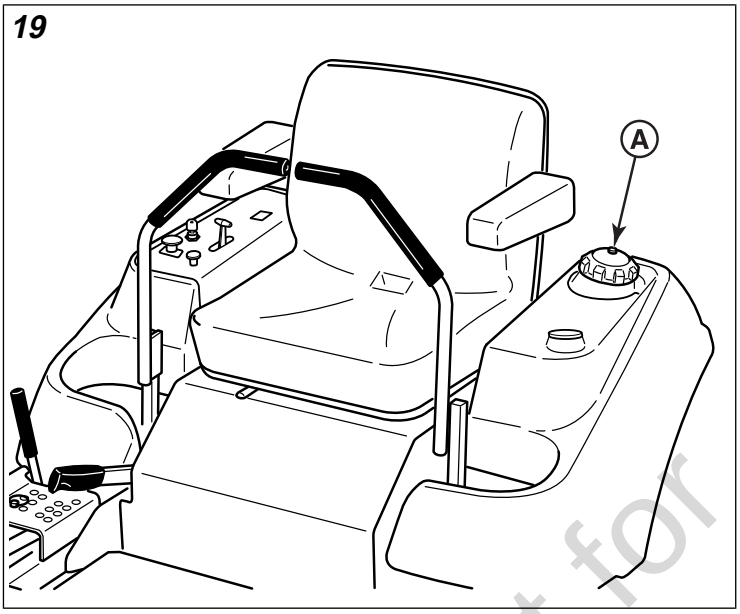

2. Fill the fuel tank to the bottom of the filler neck. This will allow for fuel expansion.
   Note: Do not overfill. Refer to your engine owner's manual for specific fuel recommendations.
3. Install and hand tighten the fuel cap.

NOTICE

Refer to your engine owner's manual for specific fuel recommendations.

Replacing the Fuel Filter

WARNING

Fuel and its vapors are extremely flammable and explosive.

Fire or explosion can cause severe burns or death.

Do NOT remove the fuel filter when the engine is hot, as spilled gasoline may ignite. Do NOT spread hose clamps further than necessary. Ensure clamps grip hoses firmly over filter after installation.

Carbureated Models: The fuel filter is located in the fuel line between fuel tank and carburetor, near the fuel pump.

Fuel Injected Models: The fuel filter is located in the fuel line between the fuel tank and fuel pump.

If filter is dirty or clogged, replace as follows:

1. Disconnect the negative battery cable.
2. Place a container below the filter to catch spilled fuel.
3. Using a pliers, open and slide hose clamps from fuel filter.
4. Remove hoses from filter.
5. Install new filter in proper flow direction in fuel line.
6. Secure with hose clamps.
7. Reconnect the negative battery cable when finished.

Check Engine Oil Level

Interval: Before Each Use

Refer to the engine owners manual for dipstick and oil fill locations and specific engine oil check and fill procedures.

Changing the Engine Oil and Filter

This series of mower equipped with the Briggs & Stratton Professional Series (A, Figure 20) engine option. Please reference figure 20 for the location of the components listed in this procedure.

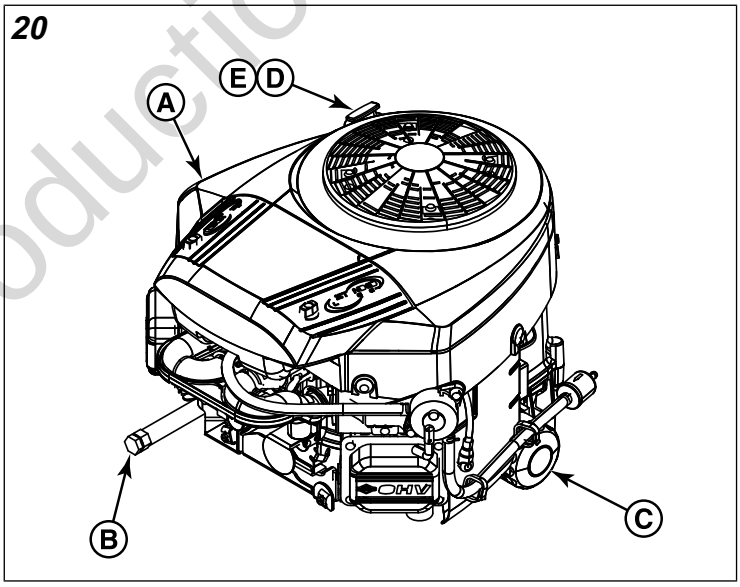

1. Warm engine by running for a few minutes. (Refer to the engine operator's manual for oil and filter replacement instructions.)
2. Remove the oil drain hose (B) from its storage position and route the hose so that when the oil drain cap is removed the oil can be drained into a small pan.
3. Place a small pan under the oil drain hose to catch the oil. Using the appropriate tools, remove the oil drain cap from the oil drain hose and drain the engine oil.
4. After draining, replace the cap and wipe up any spilled oil. Reinstall the oil drain hose to its storage position so it is retained during normal operation.

Not for Reproduction

5. Place an absorbent shop cloth under the engine oil filter (C). Remove the engine oil filter and replace with a new one.
6. Add engine oil (refer to engine operator's manual) in the fill tube (D) and check the amount of oil in the engine using the engine oil dipstick (E).
7. Remove the shop cloth and wipe up any spilled oil.

Engine Maintenance

For engine maintenance schedules and procedures, please refer to the engine operator's manual.

Inspect Muffler and Spark Arrester

Inspect the muffler for cracks, corrosion, or other damage. Remove the spark arrester, if equipped, and inspect for damage or carbon blockage. If replacement parts are required, make sure to use only original equipment replacement parts.

> **WARNING**
> Replacement parts must be the same and installed in the same position as the original parts or fire could result.

Check / Fill Transmission Oil

Oil Type: 20W-50 conventional detergent motor oil

1. Check the oil level when the unit is cold. Locate the transmission oil reservoirs (A, Figure 21). The oil should be up to the "FULL COLD" mark (B). If the oil is below this level, proceed to step #2.

21

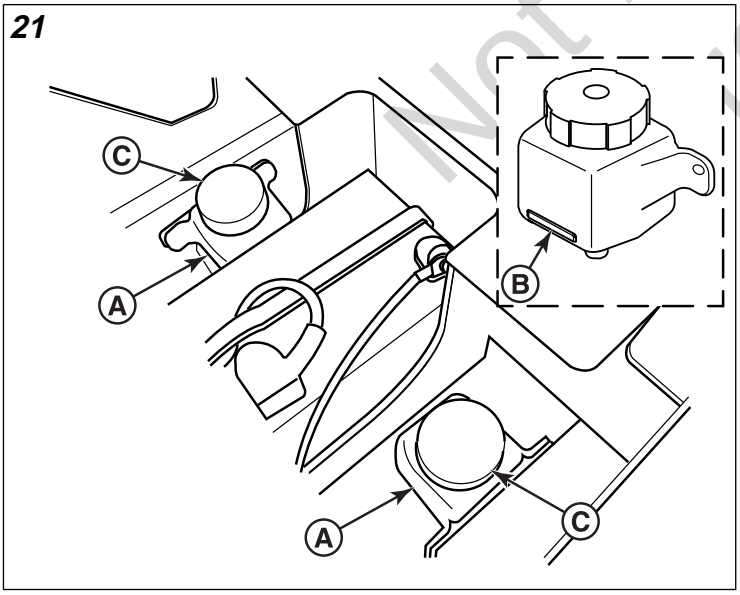

2. Before removing reservoir caps (C), make sure the area around the reservoir cap and fill neck of the reservoir is free of dust, dirt, or other debris. Remove the reservoir cap.
3. Add oil up to the full cold mark.
4. Reinstall the reservoir caps.

Transmission Oil Filter Change

Change Interval: Every 200 Hours

Replacement Filter Number: 5101026X1

1. Locate the transmission oil filters (A, Figure 22) underneath the rear of the machine on the transmissions.

22

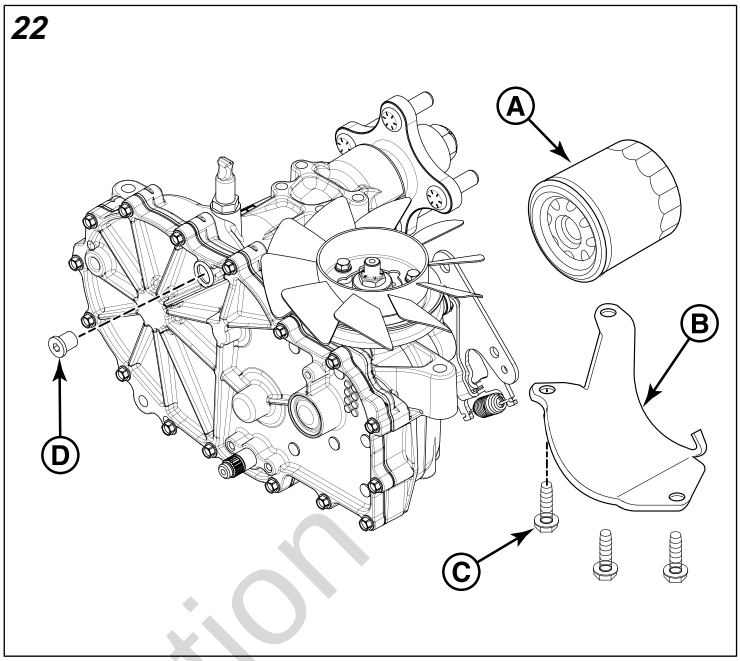

2. Remove the three 1/4" filter guard screws (C) and the filter guard (B).
3. Clean the area around the filter base and remove the filter.
4. Apply a film of new oil to the gasket of the new replacement filter. After the oil has drained, thread the new filter onto the filter base until the gasket makes contact, then tighten 3/4 of a turn more.
5. Reinstall the filter guard with the three 1/4" filter guard screws
6. Using a hex bit swivel socket or a modified allen wrench remove the top port plug from the transmissions.
7. Remove the transmission reservoir cap and fill with oil until oil appears at the bottom of the transmission's top port (approximately 2 qts (1,89 L).
8. Reinstall the top port plug and tighten to 15 ft lbs (20,38 Nm).
9. Continue to add oil to the transmission oil reservoirs until the oil level reaches the "FULL COLD" mark. Reinstall the oil reservoir cap.
10. Repeat this process for the other side of the machine.
11. Run the unit for several minutes and check the transmission oil level.

IMPORTANT NOTE: Use caution after changing the filter; air in the hydraulic system may affect the responsiveness of the ground speed control levers. Repeat step 11 until the air is out of the system.

Not for Production

Lubrication

Lubricate the unit at the locations shown in figures 23, 24, and 25 as well as the following lubrication points.

Grease	
	Front caster wheel axles & yokes
	Transmission cradle pivots
	Deck lift pivot blocks
	Mower deck spindles
	Mower deck idler arm

Use grease fittings when present. Disassemble parts to apply grease to moving parts when grease fittings are not installed.

Not all greases are compatible. Red grease (p/n 5022285) is recommended. Automotive type, high temperature, lithium grease may be used when this is not available.

Oil	
	Control handle pivots & linkages
	Parking brake shaft pivots
	Seat plate pivots
	Deck lift pivot points
	Discharge chute hinge

Generally, all moving metal parts should be oiled where contact is made with other parts. Keep oil and grease off belts and pulleys. Remember to wipe fittings and surfaces clean both before and after lubrication.

23

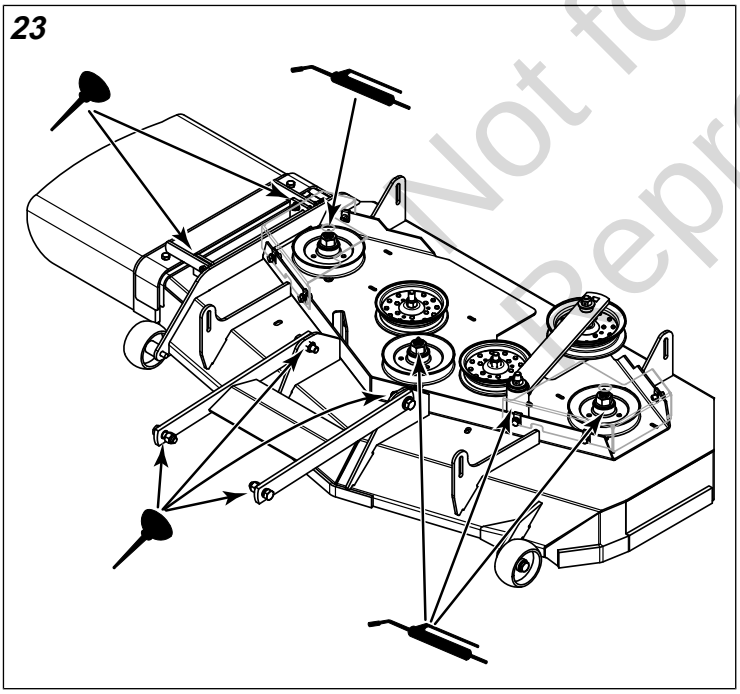

24

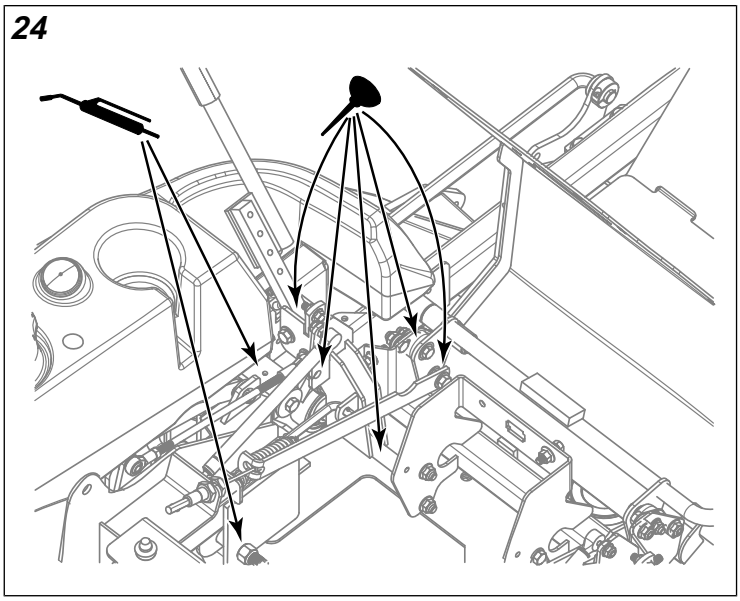

25

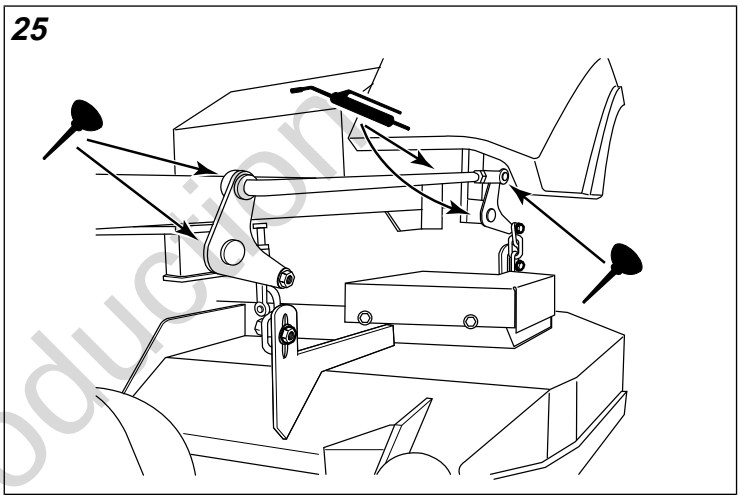

Not for Reproduction

Lubricate the Front Casters

Interval: Annually

1. Remove the 1/4-28 bolt (A, Figure 26) screwed into the caster and install a 1/4-28 grease fitting.

26

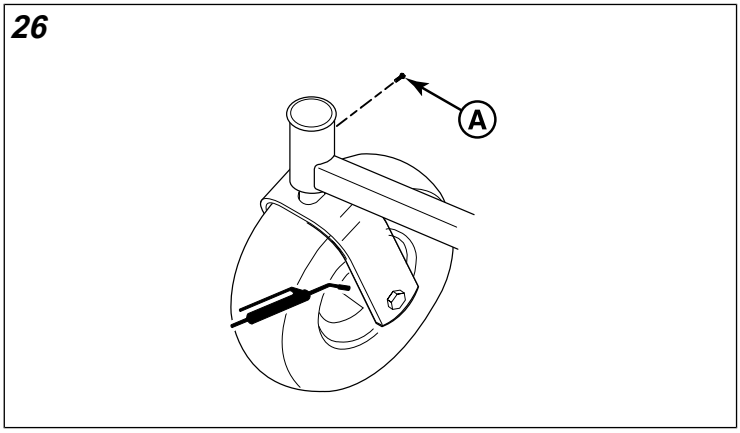

2. Grease the front caster.
3. Remove the 1/4-28 grease fitting and reinstall the 1/4-28 bolt.

4. Repeat the process for the other side of the machine.

Servicing the Mower Blades

Removing the Mower Blades

CAUTION

Laceration hazard

Mower blades are sharp.

Always wear gloves when handling, or working near, mower blades.

1. Use a block of wood to prevent the mower blade from turning as shown in Figure 27.

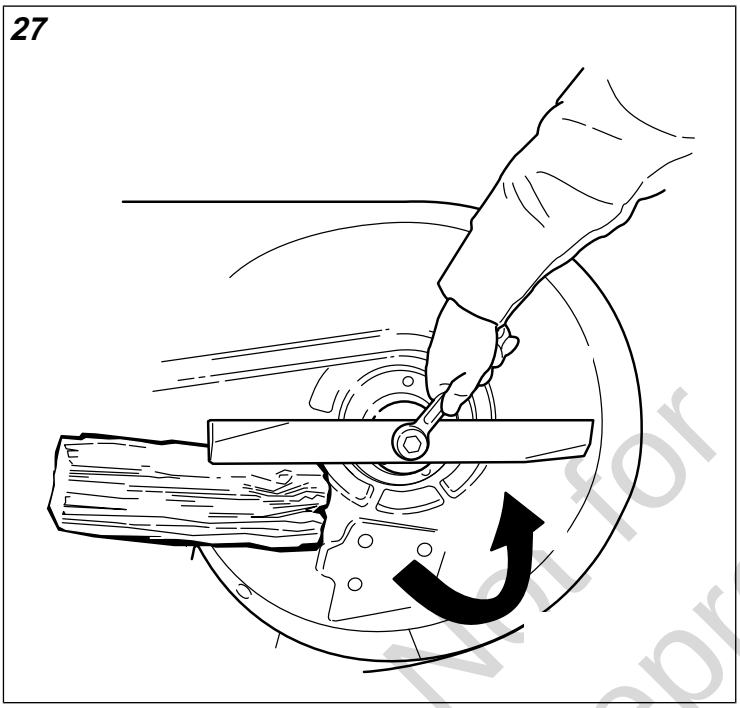

2. Using a wrench, remove the bolt securing the blade to the spindle.

Inspecting the Mower Blades

DANGER

Thrown objects hazard

Avoid injury: a worn or damaged mower blade can break and a piece of the blade could be thrown into the operator's area or bystander's area resulting in serious personal injury or death.

- Inspect the mower blade every 25 hours or at least once per year.
- If the mower blade hits a solid object, stop the engine immediately and inspect the mower blades.
- Never weld or straighten bent mower blades.

1. Remove the mower blade from the unit. See Removing the Mower Blades.
2. Inspect the mower blade (Figures 28 and 29). Discard the mower blade if it has any of the following conditions:
   - More than .5" (12,7 mm) of the mower blade metal has been removed from previous sharpening or wear (A, Figure 28)
   - The air lifts are excessively eroded (A, Figure 29) and the notch (B) is .25" (6,35 mm) deep or greater.
   - The mower blade is broken or bent.

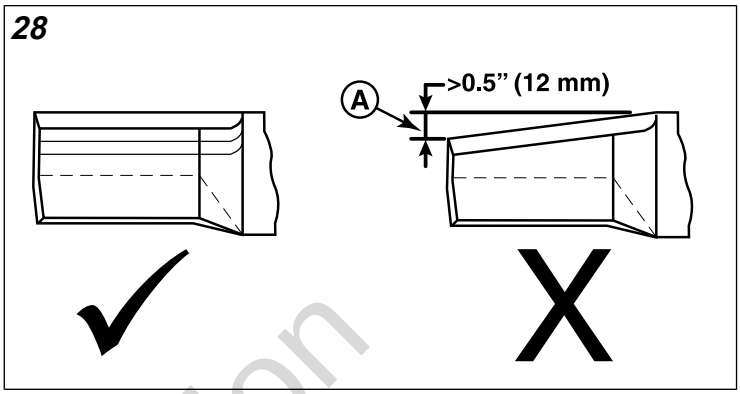

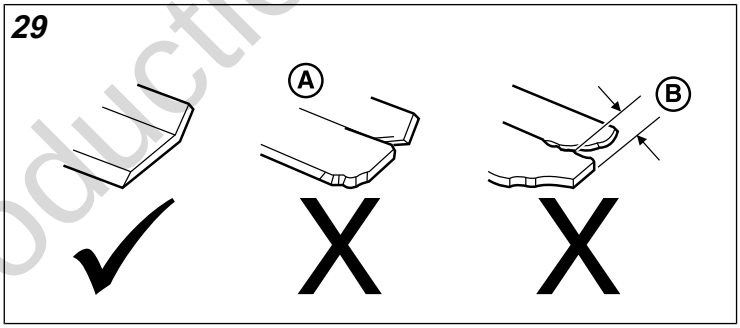

3. If the cutting edges are not sharp or have nicks, sharpen the blades. See Sharpening the Mower Blades.

Sharpening the Mower Blades

WARNING

Thrown objects and fire hazard

Grinding mower blades throws sparks and fine metal particles that are capable of igniting gasoline and gasoline vapors, and that can injure unprotected eyes.

Be sure all flammable materials are cleared from the area where grinding will occur.

Always wear safety glasses or goggles when grinding mower blades.

1. Sharpen mower blades with a grinder, hand file, or electric blade sharpener.
2. Sharpen the blade by removing an equal amount of material from the cutting edge of each end of the blade.

Not for Reproduction

3. Keep the original bevel (A, Figure 30) when grinding. DO NOT change the mower blade bevel.

30

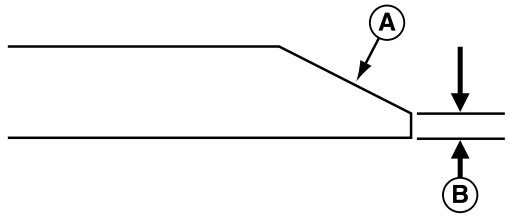

4. The mower blade should have a maximum of 1/64" (0,40 mm) cutting edge (B) or less.

Balancing the Mower Blades

CAUTION

Thrown objects hazard

An unbalanced mower blade can create excessive vibration and damage the unit, or cause mower blade failure resulting in thrown debris.

Be sure blade is balanced before installing.

1. Clean the mower blade to remove any dried grass or other debris.
2. Clamp a nail in a bench vise, hang the mower blade on the nail, and position the blade in a level horizontal position as shown in Figure 31.

31

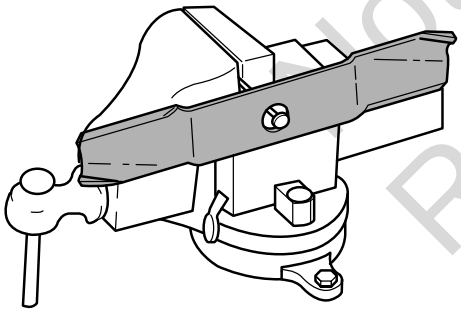

3. Check the balance of the mower blade. If either end of the mower blade moves downward is heavier than the other. Sharpen the heavy end until balance is achieved. See Sharpening the Mower Blades for sharpening instructions.
4. Repeat the process until the mower blade remains in the horizontal, level position.

Installing Mower Blades

1. Reinstall each mower blade with the air lifts (C, Figure 32) pointing up towards the mower deck as shown in Figure 32. Secure with the mower blade mounting bolt and flat washer (A & B). Wedge a wooden block (D) between the mower blade and the mower deck housing to keep the mower blade from turning and torque to 70 ft. lbs (94 Nm).

32

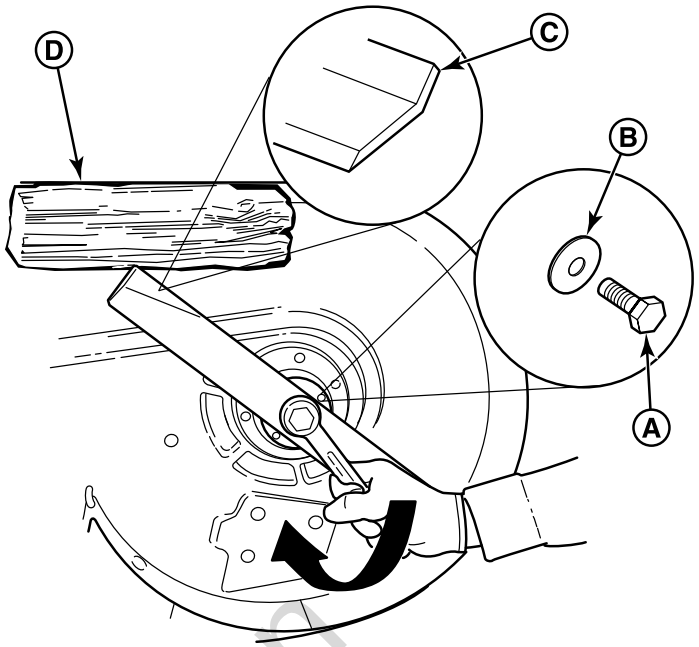

Seat Adjustment

The seat can be adjusted forward and back. Move the lever (A, Figure 33) towards the left, position the seat as desired, and release the lever to lock the seat into position.

33

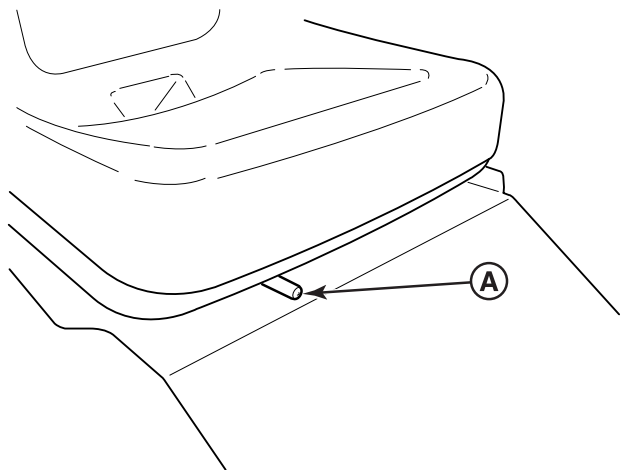

Ground Speed Control Lever Adjustment

The control levers can be adjusted in three ways. The alignment of the control levers, the placement of the levers (how close the ends are to one another) and the height of the levers can be adjusted.

To Adjust the Handle Alignment

Loosen the mount bolts (A, Figure 34) and pivot the lever(s) (C) to align with each other.

Not for Reproduction

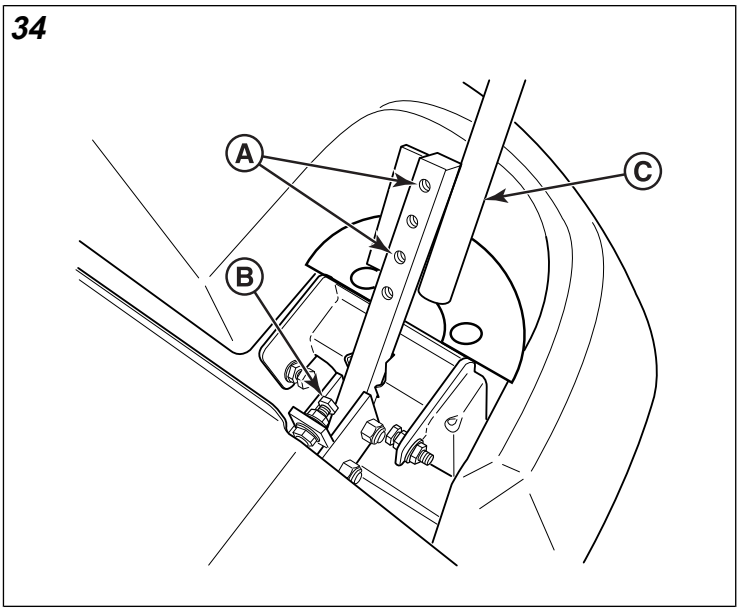

To Adjust the Handle Placement

Loosen the jam nuts and adjust the placement bolt (B) in or out to properly adjust the lever end spacing.

To Adjust the Handle Height

Remove the mounting hardware and reposition the handle either up or down from its original position. You will need to readjust the handle alignment as described above.

Speed Balancing Adjustment

If the rider veers to the right or left when the ground speed control levers are in the maximum forward position, the top speed of each of these levers can be balanced by turning the adjustment bolt(s) (A, Figure 35). Only adjust the speed of the wheel that is traveling faster.

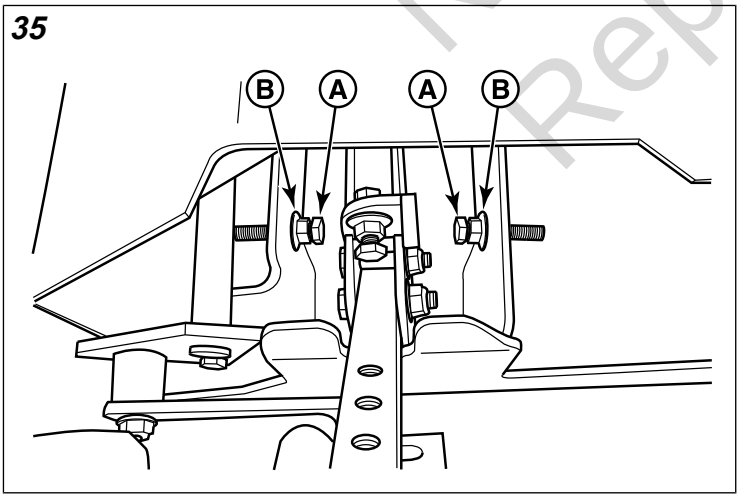

To Reduce the Speed of the Faster Wheel

1. Loosen the securing nut (B).
2. Turn the top speed adjustment bolt **counter-clockwise** to reduce the speed.
3. Retighten the securing nut when adjustment is complete.

WARNING

DO NOT adjust the tractor for a faster overall speed forward or reverse than it was designed for.

Checking Tire Pressures

Tire pressure should be checked periodically, and maintained at the levels shown in the Specifications chart. Note that these pressures may differ slightly from the "Max Inflation" stamped on the side-wall of the tires. The pressures shown provide proper traction and extend tire life.

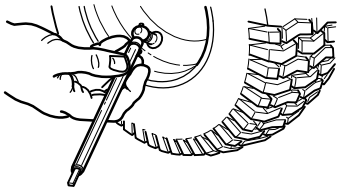

Foot Pedal Adjustment

The deck lift foot pedal can be adjusted to accommodate the operator's height for optimal comfort.

To adjust pedal position:

1. Remove the foot pedal (A, Figure 36) from the pedal mount tab (B).

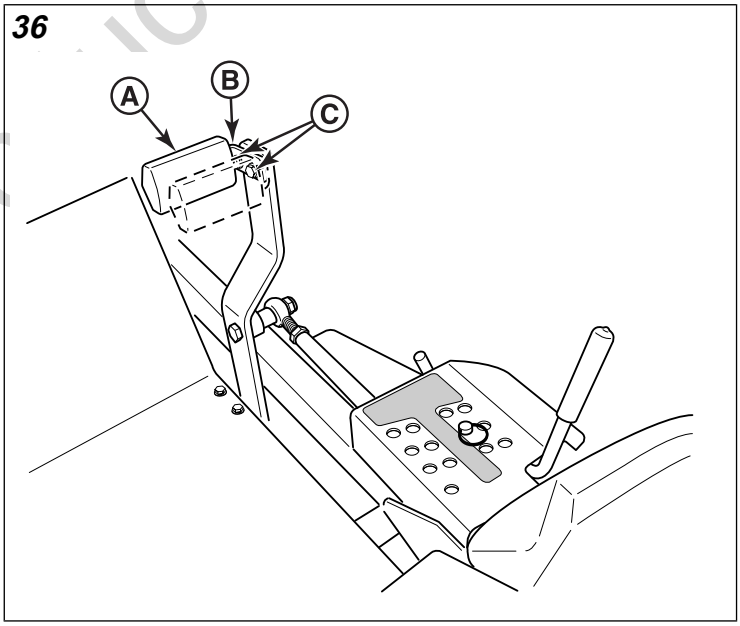

2. Remove the pedal mount hardware (C) and rotate the tab 180 degrees.
3. Reinstall the pedal mount hardware and tighten securely.
4. Reinstall the foot pedal on the pedal mount tab in the proper orientation as shown in Figure 36.

Floor Pan Removal & Installation

This unit is equipped with a removable floor pan which can be removed to provide better access to the mower deck.

Not for Reproduction

1. Loosen and remove the retaining hardware (A, Figure 37) that secures the floor pan to the frame of the unit.

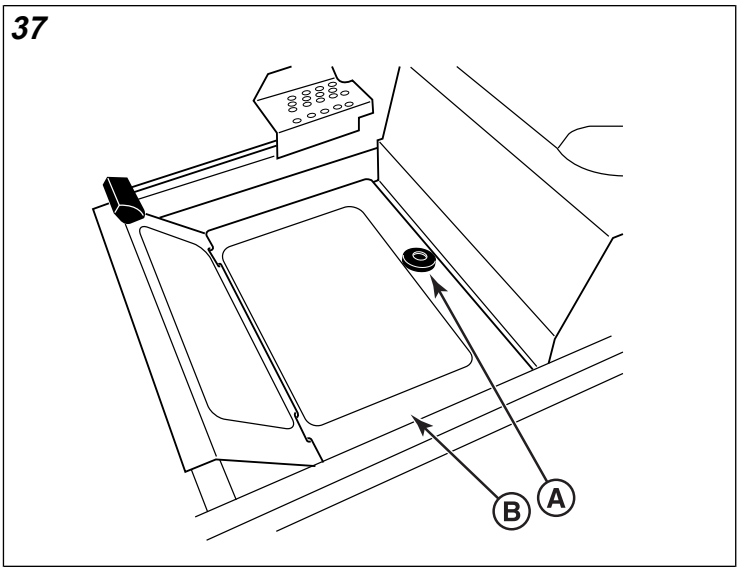

2. Tilt the back end of the floor pan up and then remove it from the unit.
3. To re-install the floor pan: Reverse the removal procedure.

Seat Plate Locking Retainer (CE Export Units)

CE export units are factory equipped with a locking seat plate retainer. In order to access the components under the seat plate for maintenance procedures, the seat plate retainer must first be unlocked and then re-locked after the maintenance procedure is complete.

1. Loosen the serrated flange nut (A, Figure 38) and rotate the J-bolt (B) 180 degrees to the unlocked position (C) so that it will pass through the slot when the seat plate (D) is raised .

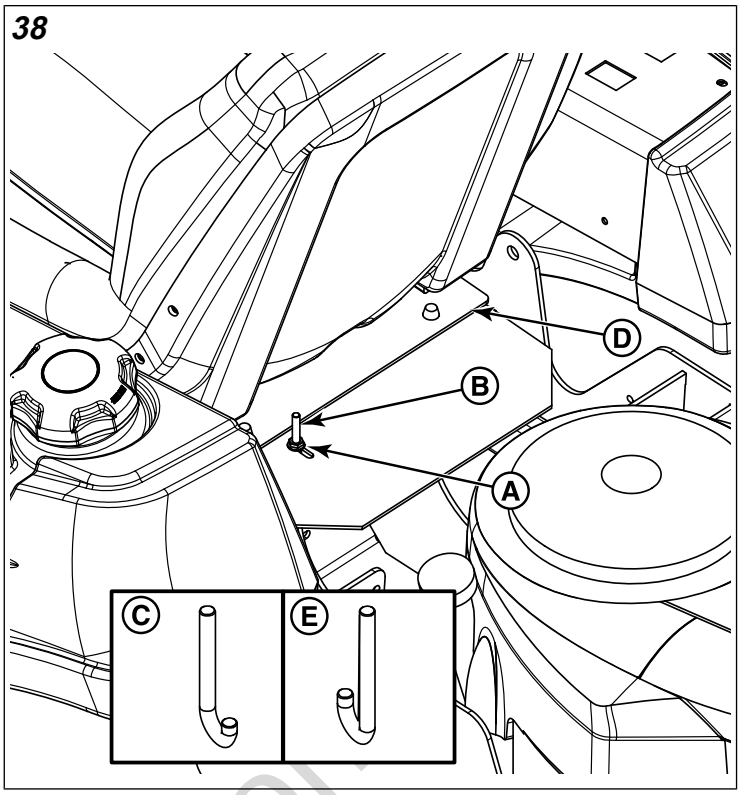

2. Tilt the seat plate all the way forward.
3. Tilt the seat plate back into place, rotate the J-bolt 180 degrees so that hook part of the J-hook faces towards the front of the machine to the locked position (E) and tighten the serrated flange nut to lock in place.

Neutral Adjustment

The neutral system for this mower consists of two neutral linkage rods and a pivot that connect the ground speed control lever to the transmission. The lower rod that connects the transmission to the pivot is factory preset and should not be changed for neutral adjustment purposes. The adjustment is achieved by changing the length of the upper rod (A, Figure 39) that connects the ground speed control lever to the pivot.

Not for Reproduction

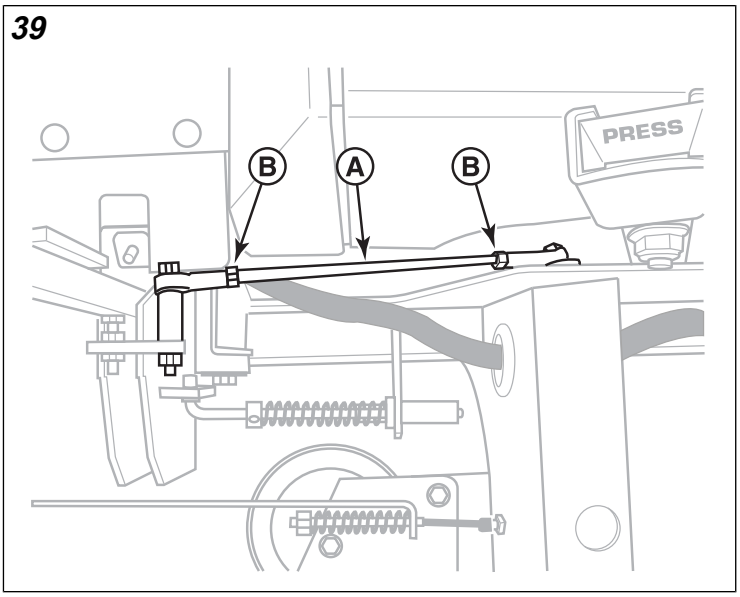

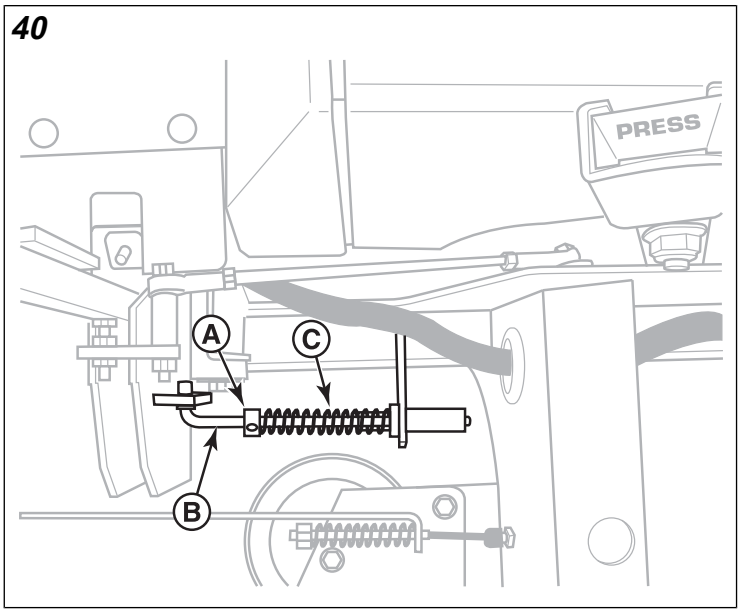

Determining if Adjustment is Necessary: If the tractor "creeps" while the ground speed control levers are locked in the NEUTRAL position, then it is necessary to adjust the neutral linkage rods.

NOTE: Perform this adjustment on a hard, level surface such as a concrete floor.

1. Disengage the PTO, engage the parking brake and turn off the engine.
2. There are two nuts (B) on the linkage rod (A). Loosen the nuts from the ball joints and turn the linkage rod to adjust.
   - If the machine creeps forward, turn the rod **clockwise** (while standing at the rear of the machine facing forward);
   - If the machine creeps backwards, turn the rod **counter-clockwise** (while standing at the rear of the machine facing forward).
3. Lock the nuts against the ball joints when neutral is achieved.

NOTE: The adjustment should not be performed while the machine is running. It may take several attempts to achieve neutral, depending on how much the machine creeps.

Return-to-Neutral Adjustment

Prior to performing this procedure the Neutral Adjustment Procedure must be completed.

> **WARNING**
> To avoid serious injury, perform adjustments only with engine stopped, key removed, and tractor parked on level ground.

1. Lock the ground speed control lever in the neutral position.
2. Loosen the set collar (A, Figure 40) on the neutral return rod (B).
3. Position the set collar along the neutral return rod until it contacts and very lightly compresses the neutral return spring (C).
4. Move the ground speed control levers into the operating position, pull rearward, and release.
5. Move the ground speed control levers out towards the neutral position.
   - if the ground speed control lever aligns with the notch in the neutral lock plate, adjustment is complete;
   - if the ground speed control lever stops it's return motion past the notch (while standing at the rear of the machine), re-position the set collar so the neutral return spring is less compressed.
   - if the ground speed control lever stops it's return motion before the notch (while standing at the rear of the machine), re-position the set collar so that the neutral return spring is more compressed.
6. Repeat the process as necessary until the ground speed control lever aligns with the notch in the neutral lock plate.

NOTE: It is important to note that after every adjustment of the neutral return rod, the lever must be pulled rearward and released to properly check the return-to-neutral position.

Parking Brake Adjustment

The parking brake mechanism consists of a two parking brake cables, with a spring on both ends, that routes from the transmission to the parking brake lever shaft. The position of the parking brake cables and the compressed length of the lower springs located by the transmissions are factory preset and should not be changed for parking brake adjustment procedures. The adjustment is achieved by changing the compressed spring length of the upper parking brake springs.

1. Disengage the PTO, engage the parking brake, stop the engine, and chock the tires.

Not for Reproduction

2. Raise the seat plate.
3. Locate the parking brake springs (A, Figure 41).

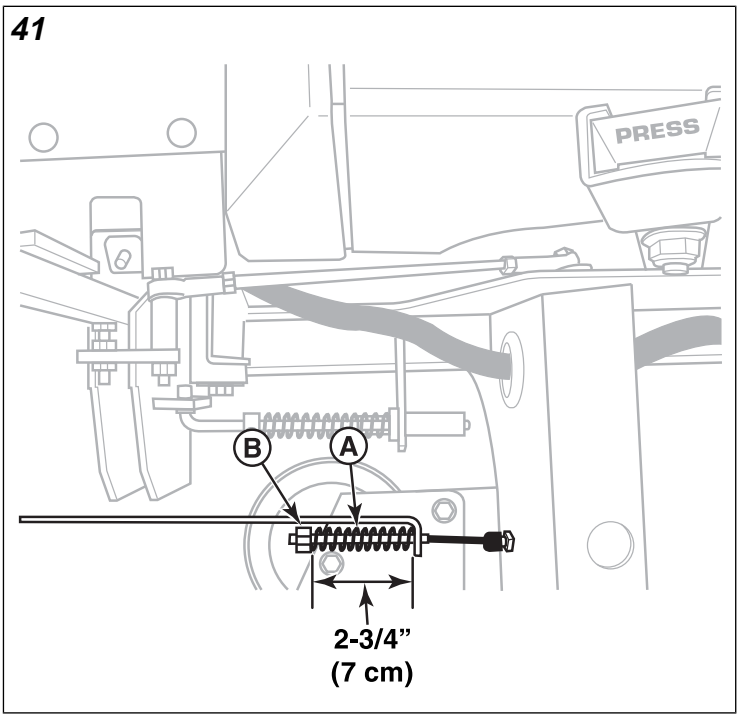

4. With the parking brake engaged measure the compressed spring length. The spring should measure 2-3/4" (7 cm) when compressed.
5. If the spring length is not 2-3/4" (7 cm), release the parking brake, and turn the adjustment nut (B) to compress or release the spring.
6. Engage the parking brake and re-measure the spring.

CAUTION

Do not adjust the spring to be shorter than 2-1/2" (6.4 cm) when compressed. This may damage the brake mechanism.

If this does not correct the braking problem, see your dealer.

Deck Lift Rod Timing Adjustment

Checking the Deck Lift Rod Timing

1. Park the machine on a flat, level surface. Disengage the PTO, engage the parking brake, turn off the engine and remove ignition key. Check that the tires are properly inflated.
2. To check the lift rod timing, measure and record the distance between the lift pivots (A, Figure 42) and the rod pivots (B). Repeat for the other side of the unit.

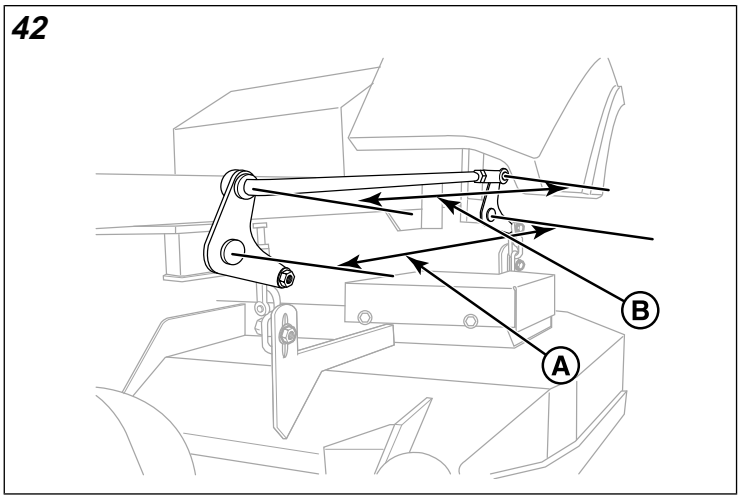

3. If the measurements for the rods are equal, no further adjustment is required. If the measurements are not equal (greater than 1/8" (3.17 mm) difference), adjustment is required, continue with ***Adjusting the Deck Lift Rod Timing.***

Adjusting the Deck Lift Rod Timing

1. Lock the deck lift pedal in the 4-1/2" (11.4 cm) position. Remove the cutting height adjustment pin and lower the mower deck.
2. To ensure that the deck is in the lowest position, push the pedal by hand towards the rear of the unit and install the height adjustment pin in the 3" (7.6 cm) position to hold in place.
3. Block up the mower deck with 2 X 4's (B, Figure 43) until all hanger chains are slack. The arrow (A) indicates the front of the mower deck.

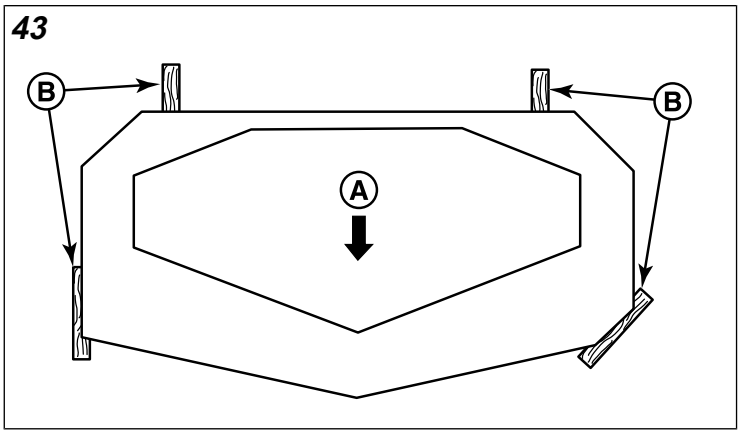

4. To adjust the deck lift rod (A, Figure 44), loosen the jam nut (B) on the clevis (C) then remove the 1/2" clevis pin (D), spacer (E) and hair pin (F) fastening the clevis to the lift pivot arm (G). Turn the clevis clockwise to shorten the distance between the rod pivots until the measurements between the lift pivots and rod pivots are the same. Reinstall the clevis on the lift pivot arm and secure with the 1/2" clevis pin, spacer and hair pin previously removed. Tighten the jam nut against the clevis.

Not for Reproduction

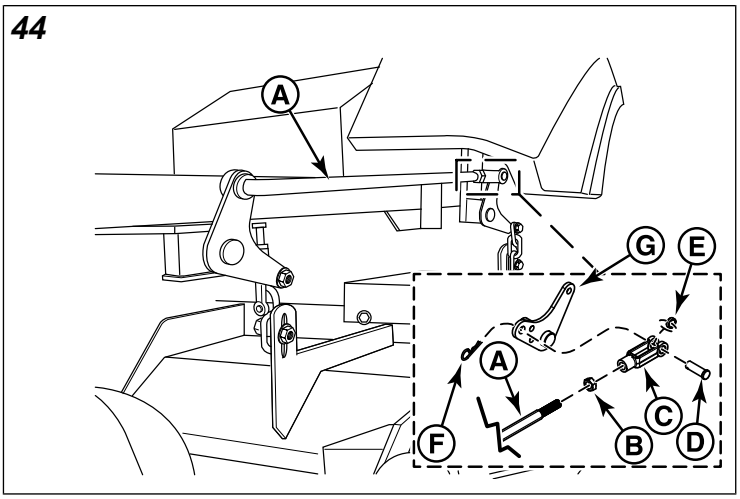

5. Remove the blocks from under the mower deck.
6. Remove the cutting height adjustment pin from in front of the deck lift pedal arm. Lift the mower deck and reinstall the adjustment pin in the desired mowing height.

Deck Leveling Adjustment

Before adjusting the deck level, the deck lift rod timing must be checked and/or adjusted.

Determining if the Deck Leveling Needs to Be Adjusted

WARNING

Avoid Injury! Mower blades are sharp.
Always wear gloves when handling blades or working near blades.

1. Place the deck height adjustment pin in the 4" (10,2 cm) position.
2. See Figure 45. Position the outside mower blades so they face front-to-back.

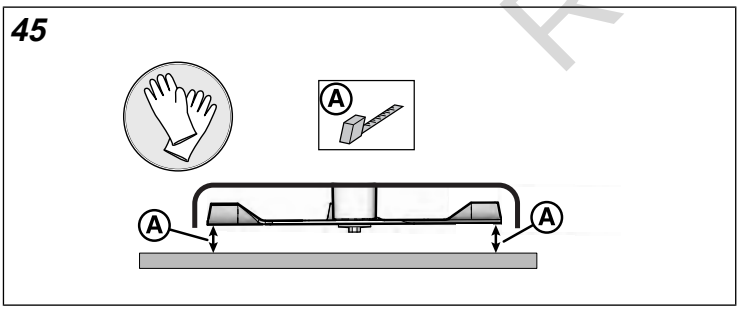

3. Measure the front tip (A) of the blade from the cutting edge to the ground.
4. Measure the rear tip (A) of the blade from the cutting edge to the ground.
   - **44" Mower Decks:** the front measurement should equal 4" (10,2 cm), and the rear measurement should equal 4-1/4" (10,8 cm).
   - **48" Mower Decks:** the front and rear measurements should equal 4" (10,2 cm).

   If the measurements are greater than 1/8" (3,17 mm) of what they should be, adjust the deck leveling.

Deck Leveling Adjustment

1. Place the deck height adjustment pin in the 4" (10,2 cm) position.
2. Place 2 X 4 blocks under each corner of the mower deck with the 3-1/2" sides being vertical. **44" Mower Decks Only:** Place a 1/4" (0,64 cm) thick spacer on the top of the rear blocks.

Coarse Adjustment

1. Loosen the nuts (D, Figure 46) and allow the front of the deck to rest on the 2 X 4's. Slide the chains in the slots until the chains are tight and tighten the nuts.

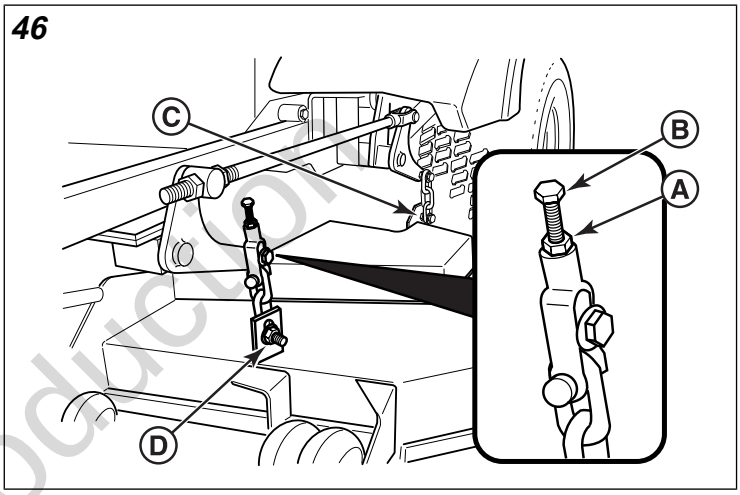

2.
   - **44" Mower Decks:** Loosen the nuts (C) and allow the rear of the deck to rest on the 2 X 4's and 1/4" spacers. Slide the chains in the slots until the chains are tight and tighten the nuts.
   - **48" Mower Decks:** Loosen the nuts (C) and allow the rear of the deck to rest on the 2 X 4's. Slide the chains in the slots until the chains are tight and tighten the nuts.
3. Repeat the process for the other side of the unit.
4. Remove all the blocks (and spacers - 44" Mower Decks) from under the mower deck.
5. Perform the *Determining if the Deck Leveling Needs to Be Adjusted* procedure to verify that the deck has been levelled correctly.
   - If the measurements are greater than 1/8" (3,17 mm) of what they should be perform the *Fine Adjustment* procedure.

Fine Adjustment

1. Loosen the jam nut (A, Figure 46) and turn the fine adjustment bolt (B) to adjust the deck height

Not for Reproduction

- Turn the bolt **clockwise** to raise the deck
- Turn the bolt **counter-clockwise** to lower the deck.

2. Once the desired measurement is achieved, retighten the jam nut.
3. Repeat the process for the other side of the unit.

Mower Drive Belt Replacement

NOTICE

To avoid damaging belt, do not pry over pulleys

1. Park the mower on a flat, level surface, such as a concrete floor. Disengage the PTO, engage the parking brake, turn off the ignition, and remove the key.
2. Lower the mower deck to its lowest cutting position and remove the mower deck guards and floor pan to gain access to the mower deck belt.

WARNING

Use extreme caution when rotating the idler arm with the break bar, due to the increased tension in the spring as the idler arm is being rotated. Injury may result if the breaker bar is prematurely released while the spring is under tension.

3. Using a ½" breaker bar, place the square end in the square hole located in the end of the idler arm (A, Figure 47). Carefully rotate the breaker clockwise, which will relieve the tension on the belt exerted from the idler arm.

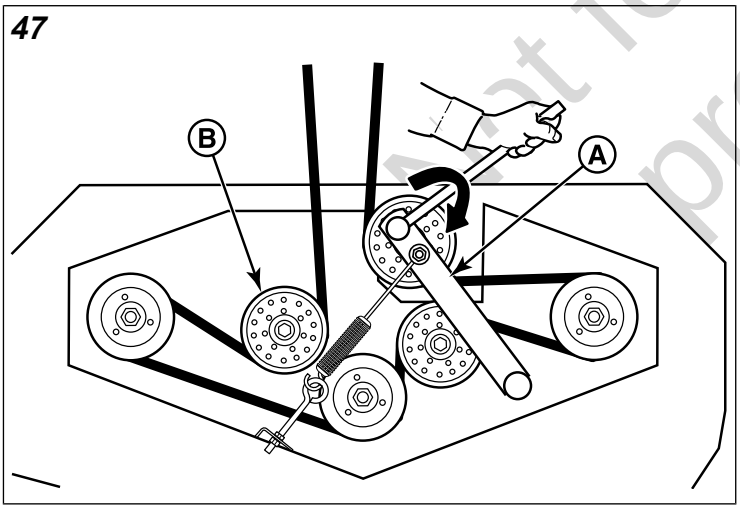

4. Slide the drive belt over the edge of the stationary idler pulley (B). Carefully release the tension on the breaker bar.
5. Remove the old belt and replace with a new one (A, Figure 48). Make sure that the V-side of the belt runs in the spindle pulley (B) grooves.

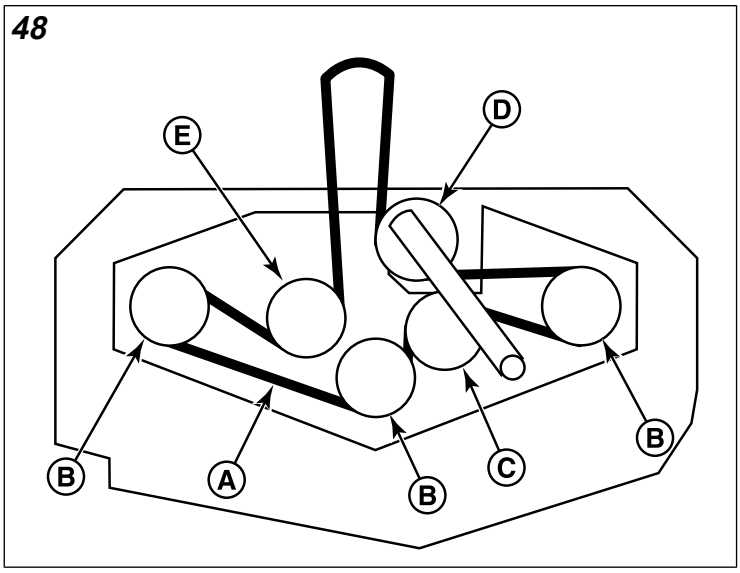

6. Install the drive belt on the PTO pulley, the spindle pulleys, the front stationary idler pulley (C), and the adjustable idler pulley (D). Carefully rotate the breaker bar clockwise and install the belt on the rear stationary idler pulley (E).
7. Carefully release the tension on the breaker bar.

Check the Mower Belt Idler Tensioner Spring Length

1. Set the mower deck to its middle cutting position.
2. Measure the coil length (A, Figure 49) of the mower belt idler tensioner spring (B). The measurement should equal 7" (17.8 cm). If the measurement does not equal 7" (17.8 cm), perform the Adjust the Mower Belt Idler Tensioner Spring Length procedure.

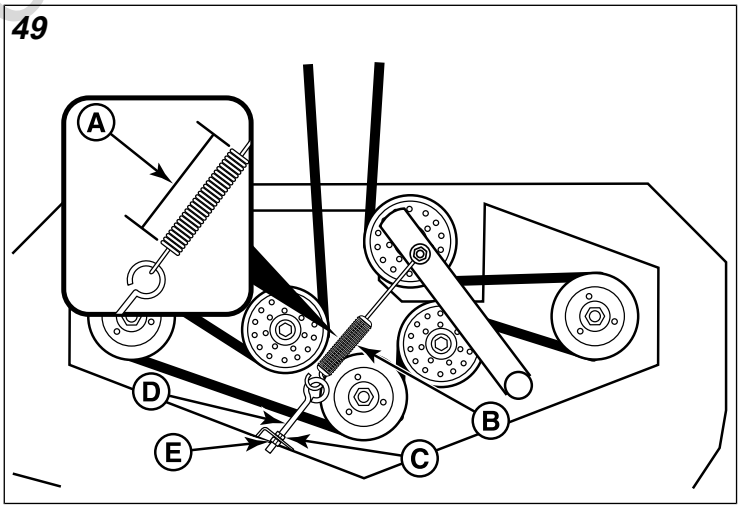

Adjust the Mower Belt Idler Tensioner Spring Length

1. Loosen the jam nut (C, Figure 49) on the eyebolt (D).
2. Turn the adjustment nut (E) until the measurement of 7" (17.8 cm) is achieved.
3. Re-tighten the jam nut.

Not for production

4. Re-install the mower deck guards and the floor pan.
5. Run the mower under no-load condition for about five (5) minutes to break in the new belt.

Transmission Drive Belt Replacement

The illustration depicts the transmission drive belt setup as seen from the top side of the unit and the arrow (A, Figure 50) indicates the front of the unit.

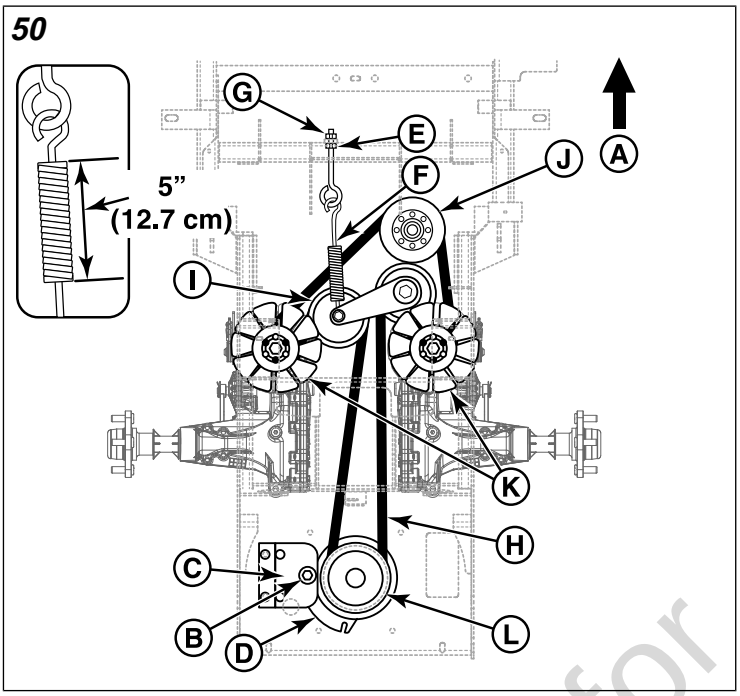

1. Park the mower on a smooth, level surface such as a concrete floor. Disengage the PTO, engage the parking brake, turn off the ignition, and remove the key.
2. Remove the mower belt. See Mower Drive Belt Replacement for removal instructions.
3. Remove the hardware (B) that secures the clutch anchor pad (C) to the PTO clutch (D) and disconnect the wire harness from the PTO clutch.

WARNING

STORED ENERGY DEVICE: Improper release of the belt tension spring can result in personal injury. Use extreme caution when removing the spring.

4. Loosen the jam nut (E) on the spring anchor eyebolt (F).
5. Loosen the adjustment nut (G) on the spring anchor eyebolt to release the majority of the belt tension. Use caution to remove the nut to completely release the tension.
6. Remove the old belt and replace with a new one (H). Make sure the V-side of the belt runs in the grooves of the adjustable idler pulley (I), front stationary idler pulley (J), both transmission pulleys (K) and the crankshaft pulley (L).
7. Reinstall the spring anchor eyebolt into the spring anchor tab and loosely fasten the adjustment nut.
8. Tighten the nut until the spring achieves a coil-to-coil measurement of 5" (12.7 cm).
9. Tighten the jam nut.
10. Reinstall the clutch anchor pad to the PTO clutch and secure using the hardware previously removed. Reconnect wire harness to the PTO clutch.
11. Reinstall the PTO belt. See Mower Drive Belt Replacement for instructions.

Rear Suspension Adjustment

The shock assembly can be adjusted in two ways to allow the operator to customize the ride according to operator’s weight and/or operating conditions. You have the option of adjusting the spring pre-load and/or the upper mounting position.

Items to consider before adjusting the suspension.

- Less spring pre-load should be used with light weight operators, which will provide a softer, more cushioned ride.
- More spring pre-load or upper mounting position #2 should be used with heavy weight operators, or when a rear-mount grass bagger system is installed, which will provide a stiffer, more rigid ride.

To Adjust the Spring Pre-Load:

1. Park machine on a flat, level surface. Disengage the PTO, stop the engine and engage the parking brake.
2. Raise the rear of the machine and secure with jackstands. Chock the front wheels to prevent the machine from rolling.
3. Remove the rear drive tires.

WARNING

Use two hands when adjusting the shock springs. This will prevent the wrench from slipping while pressure is applied.

4. See Figure 51. Using the supplied spanner wrench (p/n 5022853), insert the tip of the wrench into the notch in the pre-load adjuster. While holding the wrench in place with one hand, turn **counter-clockwise** to increase the pre-load, turn CLOCKWISE to decrease the pre-load. Make sure both shocks are set to the same amount of pre-load.

Not for Reproduction

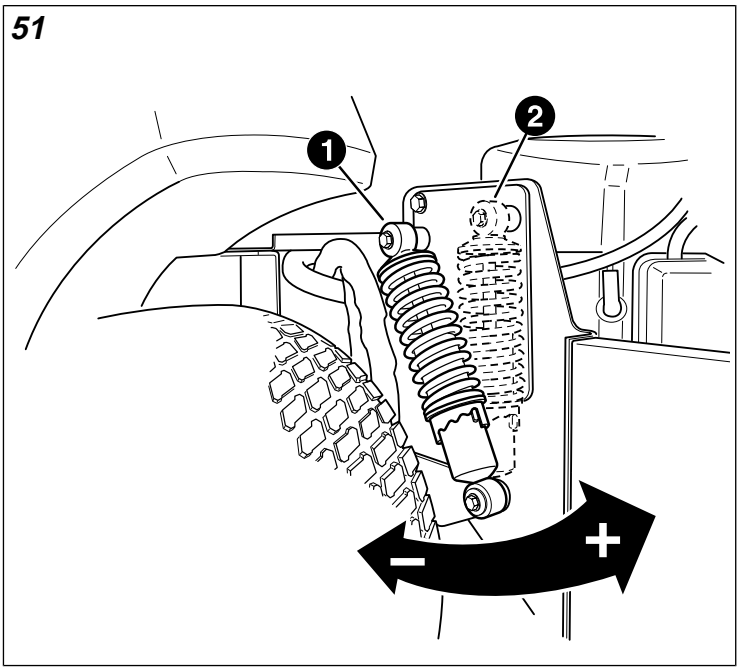

5. Reinstall the rear drive tires. Torque the lug bolts to 85-95 ft/lbs. (115-129 Nm). Remove the jackstands from under the machine.

NOTE: Spanner wrench is located under the seat on the right-hand side of the machine.

To Adjust the Upper Mounting Position:

1. Park machine on a flat, level surface. Disengage the PTO, stop the engine and engage the parking brake.
2. Raise the rear of the machine and secure with jackstands. The jackstands must under the bumper. Chock the front wheels to prevent the machine from rolling.
3. Position the jack under the cross member that ties the suspension arms together and slowly raise the rear suspension to relieve the pressure on the upper shock mounting bolts.

NOTE: This will require small adjustments to the jack's position. The shock should move freely on the mounting bolt when the pressure is relieved.

4. Remove the upper shock mounting hardware and pivot the shock to the position #2 (see Figure 51). Adjust the jack to align the shock mounts to the shocks.
5. Reinstall the upper shock mounting hardware and tighten securely.
6. Remove the jack from under the suspension cross member.
7. Remove the jackstands from under the machine.

Battery Maintenance

This unit is equipped with a maintenance-free BCIU1 battery.

WARNING

Keep open flames and sparks away from the battery.

- Be careful when handling the battery.
- Avoid spilling electrolyte.
- Keep flames and sparks away from the battery.
- When removing or installing battery cables, disconnect the negative cable FIRST and reconnect it LAST. If not done in this order, the positive terminal can be shorted to the frame by a tool.

Cleaning the Battery and Cables

1. Disconnect the cables from the battery, negative [-] cable first (A, Figure 52).

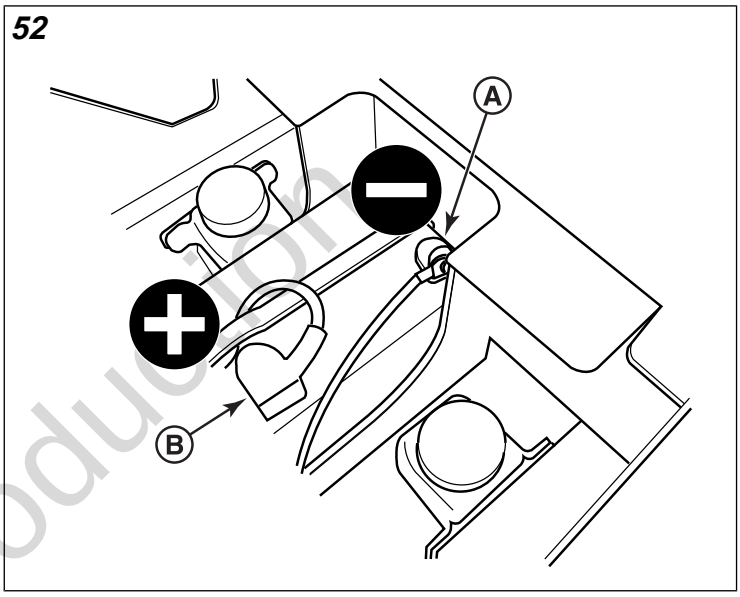

2. Clean the battery terminals and cable ends with a wire brush until shiny.
3. Reinstall the battery and reattach the battery cables, positive [+] cable first (B).
4. Coat the cable ends and the battery terminals with petroleum jelly or non-conducting grease.

Battery Service

WARNING

Keep open flames and sparks away from the battery; the gasses coming from it are highly explosive. Ventilate the battery well during charging.

Checking Battery Voltage

A voltmeter can be used to determine condition of battery. When engine is off, the voltmeter shows battery voltage, which should be 12 volts. When engine is running, the voltmeter shows voltage of charging circuit which normally is 13 to 14 volts.

Not for Reproduction

A dead battery or one too weak to start the engine may not mean the battery needs to be replaced. For example, it may mean that the alternator is not charging the battery properly. If there is any doubt about the cause of the problem, see your dealer. If you need to replace the battery, follow the steps under Cleaning the Battery & Cables in the Regular Maintenance Section.

Charging a Completely Discharged Battery

WARNING

- Do NOT charge battery with key switch ON.
- Never use a quick battery charger to start engine.
- Always disconnect negative (-) battery cable before charging battery,

1. Be aware of all the safety precautions you should observe during the charging operation. If you are unfamiliar with the use of a battery charger and hydrometer, have the battery serviced by your dealer.
2. Add distilled water sufficient to cover the plate (fill to the proper level near the end of the charge). If the battery is extremely cold, allow it to warm before adding water because the water level will rise as it warms. Also, an extremely cold battery will not accept a normal charge until it becomes warm.
3. Always unplug or turn the charger off before attaching or removing the clamp connections.
4. Carefully attach the clamps to the battery in proper polarity (usually red to [+] positive and black to [-] negative).
5. While charging, periodically measure the temperature of the electrolyte. If the temperature exceeds 125° F (51.6° C), or if violent gassing or spewing of electrolyte occurs, the charging rate must be reduced or temporarily halted to prevent battery damage.
6. Charge the battery until fully charged (until the specific gravity of the electrolyte is 1.250 or higher and the electrolyte temperature is at least 60° F). The best method of making certain a battery is fully charged, but not over charged, is to measure the specific gravity of a cell once per hour. The battery is fully charged when the cells are gassing freely at low charging rate and less than 0.003 change in specific gravity occurs over a three hour period.

Jump Starting With Auxiliary (Booster) Battery

Jump starting is not recommended. However, if it must be done, follow these directions. Both booster and dis-charged batteries should be treated carefully when using jumper cables. Follow the steps below EXACTLY, being careful not to cause sparks. Refer to Figure 53.

WARNING

For your personal safety, use extreme care when jump starting. Never expose battery to open flame or electric spark – battery action generates hydrogen gas which is flammable and explosive. Do not allow battery acid to contact skin, eyes, fabrics, or painted surfaces. Batteries contain a sulfuric acid solution which can cause serious personal injury or property damage.

To avoid engine damage, do not disconnect battery while engine is running. Be sure terminal connections are tight before starting.

53

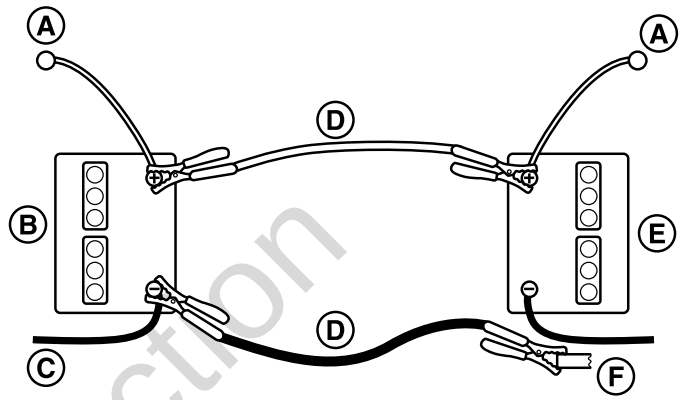

This hook-up is for negative grounded vehicles.	
Callout	**Description**
A	To Starter Switch
B	Starting Vehicle Battery
C	To Ground
D	Jumper Cable
E	Discharged Vehicle Battery
F	Engine Block
Make sure vehicles do not touch.	

1. Both batteries must be of the same voltage.
2. Position the vehicle with the booster battery adjacent to the vehicle with the discharged battery so that booster cables can be connected easily to the batteries in both vehicles. Make certain vehicles do not touch each other.
3. Wear safety glasses and shield eyes and face from batteries at all times. Be sure vent caps are tight. Place damp cloth over vent caps on both batteries.
4. Connect positive (+) cable to positive post of discharged battery (wired to starter or solenoid).
5. Connect the other end of same cable to same post marked positive (+) on booster battery.
6. Connect the second cable negative (-) to other post of booster battery.

Not for Reproduction

7. Make final connection on engine block of stalled vehicle away from battery. Do not lean over batteries.
8. Start the engine of the vehicle with the booster battery. Wait a few minutes, then attempt to start the engine of the vehicle with the discharged battery.
9. If the vehicle does not start after cranking for ten (10) seconds, STOP PROCEDURE. More than ten (10) seconds seldom starts the engine unless some mechanical adjustment is made. Allow a sixty (60) second cool down period between starting attempts. Failure to follow these guidelines can burn out starter motor.
10. After starting, allow the engine to return to idle speed. Remove the cable connection at the engine or frame. Then remove the other end of the same cable from the booster battery.
11. Remove the other cable by disconnecting at the discharged battery first and then disconnect the opposite end from the booster battery.
12. Discard the damp cloths that were placed over the battery vent caps.

WARNING

Any procedure other than the preceding could result in:

(a) personal injury caused by electrolyte squirting out the battery vents,

(b) personal injury or property damage due to battery explosion,

(c) damage to the charging system of the booster vehicle or of the immobilized vehicle.

Do not attempt to jump start a vehicle having a frozen battery because the battery may rupture or explode. If a frozen battery is suspected, examine all fill vents on the battery. If ice can be seen or if the electrolyte fluid cannot be seen, do not attempt to start with jumper cables as long as the battery remains frozen.

Not for Reproduction

Troubleshooting

Troubleshooting Charts

Troubleshooting the Rider

Problem: Engine will not turn over or start.	
Cause	**Remedy**
Parking brake not engaged.	Engage parking brake.
PTO (electric clutch) switch in ON position.	Place in OFF position.
Ground speed control levers not in "NEUTRAL" position.	Move ground speed control levers to the "NEUTRAL" position.
Out of fuel.	If engine is hot, allow it to cool, then refill the fuel tank.
Engine flooded.	Move choke control to the closed position.
Fuse blown.	Replace fuse.

Problem: Engine will not turn over or start.	
Battery terminals require cleaning.	Clean the battery terminals.
Battery discharged or dead.	Recharge or replace.
Wiring loose or broken.	Visually check wiring and replace broken or frayed wires. Tighten loose connections.
Solenoid or starter motor faulty.	Repair or replace. See authorized dealer.
Safety interlock switch faulty.	Replace as needed. See authorized dealer.
Spark plug(s) faulty, fouled, or incorrectly gapped.	Clean and gap, or replace. See engine operator's manual.
Water in fuel.	Drain fuel and replace with fresh fuel.
Gas is old or stale.	Drain fuel and replace with fresh fuel.

Problem: Engine starts hard or runs poorly.	
Cause	**Remedy**
Fuel mixture too rich.	Clean air filter. Check choke adjustment.
Spark plug(s) faulty, fouled, or incorrectly gapped.	Clean and gap, or replace. See engine operator's manual.

Problem: Engine knocks.	
Cause	**Remedy**
Low oil level.	Check and add oil as required.
Using wrong grade oil.	See engine operator's manual.

Problem: Excessive oil consumption.	
Cause	**Remedy**
Engine running too hot.	Clean engine fins, blower screen, and air cleaner.
Using wrong weight oil.	See engine operator's manual.
Too much oil in crankcase.	Drain excess oil.

Engine exhaust is black.	
Cause	**Remedy**
Dirty air filter.	Replace air filter. See engine operator's manual.
Engine choke is in closed position.	Open choke control.

Problem: Engine runs, but rider will not drive.	
Cause	**Remedy**
Transmission release lever(s) in "free-wheel" position	Move transmission release lever(s) to the "drive" position.
Belt is broken.	Replace belt. See Transmission Drive Belt Replacement.
Drive belt slips.	See problem and cause below.
Brake is not fully released.	See authorized dealer.

Problem: Rider drive belt slips.	
Cause	**Remedy**
Pulleys or belt is greasy or oily.	Clean as required.
Tension too loose.	Adjust the spring tension. See Transmission Drive Belt Replacement.
Belt stretched or worn.	Replace belt.

Problem: Brake will not hold.	
Cause	**Remedy**
Brake is incorrectly adjusted.	See Parking Brake Adjustment.
Braking components in transmission worn.	See authorized dealer.

Problem: Rider steers or handles poorly.	
Cause	**Remedy**
Steering lever linkages are loose.	Check and tighten any loose connections.
Improper tire inflation.	See Checking Tire Pressures

Troubleshooting the Mower Deck

Problem: Mower will not raise.	
Cause	**Remedy**
Lift linkage not properly attached or damaged.	See authorized dealer.

Problem: Engine stalls easily with mower engaged.	
Cause	**Remedy**
Engine speed too slow.	Set to full throttle.
Ground speed too fast.	Decrease ground speed.
Cutting height set too low.	Cut tall grass at maximum cutting height during first pass.
Discharge chute jamming with cut grass.	Cut grass with discharge pointing towards previously cut area.

Problem: Excessive mower vibration.	
Cause	**Remedy**
Blade mounting bolts are loose.	Tighten to 70 ft. lbs. (94 Nm)
Mower blades, arbors, or pulleys are bent.	Check and replace as necessary.
Mower blades are not balanced.	Remove, sharpen, and balance blades. See Servicing the Mower Blades.
Belt installed incorrectly.	Reinstall the belt correctly.

Problem: Excessive belt wear or breakage.	
Cause	**Remedy**
Bent or rough pulleys.	Repair or replace.
Using incorrect belt.	Replace with correct belt.

Problem: Mower drive belt slips, or fails to drive.	
Cause	**Remedy**
Idler pulley spring broken, or not properly attached.	Repair or replace as needed.
Mower drive belt broken.	Replace mower drive belt.

Problem: Mower does not engage.	
Cause	**Remedy**
Electrical wiring damage.	Locate and repair damaged wire.
Battery voltage too low.	Recharge battery and check alternator. See Battery Maintenance.

Troubleshooting Common Cutting Problems

Problem: Streaking	
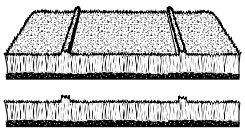	
Cause	**Remedy**
Blades are not sharp.	Sharpen your blades.
Blades are worn down too far.	Replace your blades.
Engine speed is too slow.	Always mow at full throttle.
Ground speed is too fast.	Slow down.
Deck is plugged with grass.	Clean out the mower.
Not overlapping cutting rows enough.	Overlap your cutting rows
Not overlapping enough when turning.	When turning your effective cutting width decreases–overlap more when turning.

Problem: Scalping	
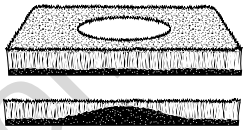	
Cause	**Remedy**
Lawn is uneven or bumpy.	Roll or level the lawn.
Mower deck cutting height is set too low.	Raise the cutting height.
Ground speed is too fast.	Slow down.
Deck is not leveled correctly.	Correctly level the deck.
Tire pressure is low or uneven.	Check and inflate the tires.

Problem: Stepped Cutting	
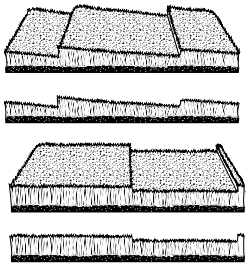	
Cause	**Remedy**
Deck is not leveled correctly.	Level the deck correctly.
Tires are not properly inflated.	Check and inflate the tires.
Blades are damaged.	Replace the blades.
Deck shell is damaged.	Repair or replace the deck.
Mower spindle is bent or loose.	Repair or replace the spindle.
Blades are installed incorrectly.	Reinstall the blades correctly.

Not for Reproduction

Problem: Uneven Cutting	
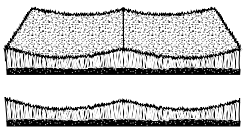	
Cause	**Remedy**
Deck is not leveled correctly.	Level the deck correctly.
Blades are dull or worn.	Sharpen or replace the blades.
Blades are damaged.	Replace the blades.
Deck is clogged with grass clippings.	Clean out the deck.
Deck shell is damaged.	Repair or replace the deck.
Mower spindle is bent or loose.	Repair or replace the spindle.
Blades are installed incorrectly.	Reinstall the blades correctly.
Tires are not properly inflated.	Check and inflate the tires.

Problem: Stingers	
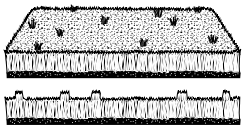	
Cause	**Remedy**
Blades are not sharp or nicked.	Sharpen your blades.
Blades are worn down too far.	Replace your blades.
Engine speed is too slow.	Always mow at full throttle.
Ground speed is too fast.	Slow down.
Deck is plugged with grass.	Clean out the mower.

Specifications

NOTE: Specifications are correct at time of printing and are subject to change without notice.

ENGINE

Fits models: 5901255, 5901256, and 5901309

25 Gross HP* Briggs & Stratton Professional Series	
Make	Briggs & Stratton
Model	44T977-0005-G1
Displacement	44.18 Cu. In (724 cc)
Electrical System	12 volt, 16 amp. Alternator, Battery: 340 cca
Oil Capacity	2.0 US qt (1.89 L) w/ filter

Fits models: 5901244 and 5901245

27 Gross HP* Briggs & Stratton Professional Series	
Make	Briggs & Stratton
Model	44Q777-0146-G1
Displacement	44.18 Cu. In (724 cc)
Electrical System	12 volt, 16 amp. Alternator, Battery: 340 cca
Oil Capacity	2.0 US qt (1.89 L) w/ filter

Power Ratings: The gross power rating for individual gasoline engine models is labeled in accordance with SAE (Society of Automotive Engineers) code J1940 Small Engine Power & Torque Rating Procedure, and is rated in accordance with SAE J1995. Torque values are derived at 2600 RPM for those engines with “rpm” called out on the label and 3060 RPM for all others; horsepower values are derived at 3600 RPM. The gross power curves can be viewed at www.BRIGGSandSTRATTON.COM. Net power values are taken with exhaust and air cleaner installed whereas gross power values are collected without these attachments. Actual gross engine power will be higher than net engine power and is affected by, among other things, ambient operating conditions and engine-to-engine variability. Given the wide array of products on which engines are placed, the gasoline engine may not develop the rated gross power when used in a given piece of power equipment. This difference is due to a variety of factors including, but not limited to, the variety of engine components (air cleaner, exhaust, charging, cooling, carburetor, fuel pump, etc.), application limitations, ambient operating conditions (temperature, humidity, altitude), and engine-to-engine variability. Due to manufacturing and capacity limitations, Briggs & Stratton may substitute an engine of higher rated power for this engine.

CHASSIS

Fuel Tank Capacity	6 gallons (22.7 L) total
Rear Wheels	
Tire Size	22 X 11 - 10 (Models with 48" mower decks); 20 X 8 - 10 (Models with 44" mower decks)
Inflation Pressure	15 psi (1.03 bar)
Front Wheels	
Tire Size	11 X 4 - 5
Inflation Pressure	25 psi (1,72 bar)

TRANSMISSIONS

LH	ZS-KHEF-8T7C-11RX
RH	ZS-GHEF-8T7B-11RX
Type	ZT3400 Transaxles
Hydraulic Fluid	SAE 20W-50 motor oil
Speeds @ 3400 rpm	
Forward	0-9.5 MPH (0-15.3 km/h) - Models with 48" mower decks; 0-8.6 MPH (0-13.8 km/h) - Models with 44" mower decks
Reverse	0-5 MPH (0-8 km/h) - Models with 48" mower decks; 0-4 MPH (0-6.4 km/h) - Models with 44" mower decks

DIMENSIONS

	Models with 44" Mower Decks	Models with 48" Mower Decks
Overall Length	80" (203 cm)	

Not for Reproduction

Overall Width	59" (150 cm) with discharge chute down	63" (160 cm) with discharge chute down
	47" (119.4 cm) with discharge chute up	51" (130 cm) with discharge chute up
Height	64-1/2" (164 cm)	65-1/2" (165 cm)
Weight (apx.):	920 lbs (417 kg)	942 lbs (427 kg)

Not for Reproduction

Warranty

Warranty Statement

BRIGGS & STRATTON WARRANTY POLICY (September 2012)

LIMITED WARRANTY

Briggs & Stratton warrants that, during the warranty period specified below, it will repair or replace, free of charge, any part that is defective in material or workmanship or both. Transportation charges on product submitted for repair or replacement under this warranty must be borne by purchaser. This warranty is effective for and is subject to the time periods and conditions stated below. For warranty service, find the nearest Authorized Service Dealer in our dealer locator map at *ferrisindustries.com*.The purchaser must contact the Authorized Service Dealer, and then make the product available to the Authorized Service Dealer for inspection and testing.

There is no other express warranty. Implied warranties, including those of merchantability and fitness for a particular purpose, are limited to one year from purchase, or to the extent permitted by law . All other implied warranties are excluded. Liability for incidental or consequential damages are excluded to the extent exclusion is permitted by law. Some states or countries do not allow limitations on how long an implied warranty lasts, and some states or countries do not allow the exclusion or limitation of incidental or consequential damages, so the above limitation and exclusion may not apply to you. This warranty gives you specific legal rights and you may also have other rights which vary from state to state or country to country.**

WARRANTY PERIOD		
Covered Parts	**Standard Warranty Period**	**Rental Warranty Period**
Riding mowers	4 years (48 months) or 500 hours, which occurs first. Unlimited hours during the first 2 years (24 months) (+Except as noted below)	90 days
Walk mowers (over 30 inches of cutting width)	2 years (24 months) unlimited hours (+Except as noted below)	90 days
+Belts, Tires, Brake Pads, Hoses, Battery, Blades	90 days	90 days
+Attachments	1 year	90 days
+Engine*	See Engine Operator's Manual	See Engine Operator's Manual

* Emissions-related components are covered by the Emissions Warranty Statement

** In Australia - Our goods come with guarantees that cannot be excluded under the Australian Consumer Law. You are entitled to a replacement or refund for a major failure and for compensation for any other reasonably foreseeable loss or damage. You are also entitled to have the goods repaired or replaced if the goods fail to be of acceptable quality and the failure does not amount to a major failure. For warranty service, find the nearest Authorized Service Dealer in our dealer locator map at FERRISINDUSTRIES.COM/AU, or by calling 1300 274 447, or by emailing or writing to salesenquires@briggsandstratton.com.au, Briggs & Stratton Australia Pty Ltd, 1 Moorebank Avenue, NSW, Australia, 2170.

The warranty period begins on the date of purchase by the first retail end user, and continues for the period of time or hours stated in the table above.

No warranty registration is necessary to obtain warranty on Briggs & Stratton products. Save your proof of purchase receipt. If you do not provide proof of the initial purchase date at the time warranty service is requested, the manufacturing date of the product will be used to determine the warranty period.

ABOUT YOUR WARRANTY

We welcome warranty repair and apologize to you for being inconvenienced. Warranty service is available only through *Ferris* Authorized Service Dealers. Most warranty repairs are handled routinely, but sometimes requests for warranty service may not be appropriate. This warranty only covers defects in materials or workmanship. It does not cover damage caused by improper use or abuse, improper maintenance or repair, normal wear and tear, or stale or unapproved fuel.

Improper Use and Abuse - The proper, intended use of this product is described in the Operator's Manual. Using the product in a way not described in the Operator's Manual or using the product after it has been damaged will void your warranty. Warranty is not allowed if the serial number on the product has been removed or the product has been altered or modified in any way, or if the product has evidence of abuse such as impact damage, or water/chemical corrosion damage.

Improper Maintenance or Repair - This product must be maintained according to the procedures and schedules provided in the Operator's Manual, and serviced or repaired using genuine Briggs & Stratton parts or equivalent. Damage caused by lack of maintenance or use of non-original parts is not covered by warranty.

Normal Wear - Like all mechanical devices, your unit is subject to wear even when properly maintained. This warranty does not cover repairs when normal use has exhausted the life of a part or the equipment. Except as noted in the warranty period, maintenance and wear items such as filters, belts, cutting blades, and brake pads (except engine brake pads) are not covered by warranty due to wear characteristics alone, unless the cause is due to defects in material or workmanship.

Stale Fuel - In order to function correctly, this product requires fresh fuel that conforms to the criteria specified in the Operator's Manual. Damage caused by stale fuel (carburetor leaks, clogged fuel tubes, sticking valves, etc) is not covered by warranty.

Other Exclusions - This warranty excludes damage due to accident, abuse, modifications, alterations, improper servicing, freezing or chemical deterioration. Attachments or accessories that were not originally packaged with the product are also excluded. There is no warranty coverage on equipment used for primary power in place of utility power or on equipment used

Not for Reproduction

in life support applications. This warranty also excludes failures due to acts of God and other force majeure events beyond the manufacturer's control.

Briggs & Stratton Emissions Warranty

California, U.S. EPA, and Briggs & Stratton Corporation Emissions Control Warranty Statement - Your Warranty Rights and Obligations

Effective April 2013

The California Air Resources Board, U.S. EPA, and Briggs & Stratton (B&S) are pleased to explain the emissions control system warranty on your Model Year 2013-2014 engine/equipment. In California, new small off-road engines and large spark ignited engines less than or equal to 1.0 liter must be designed, built, and equipped to meet the State's stringent anti-smog standards. B&S must warrant the emissions control system on your engine/equipment for the periods of time listed below provided there has been no abuse, neglect, or improper maintenance of your engine/equipment.

Your exhaust emissions control system may include parts such as the carburetor or fuel injection system, ignition system, and catalytic converter. Also included may be hoses, belts, connectors, sensors, and other emissions-related assemblies. Your evaporative emission control system may include parts such as: carburetors, fuel tanks, fuel lines, fuel caps, valves, canisters, filters, vapor hoses, clamps, connectors, and other associated components.

Where a warrantable condition exists, B&S will repair your engine/equipment at no cost to you including diagnosis, parts, and labor.

Manufacturer's Warranty Coverage:

Small off-road engines and large spark ignited engines less than or equal to 1.0 liter, and any related emissions components of the equipment, are warranted for two years [1]. If any emissions-related part on your engine/equipment is defective, the part will be repaired or replaced by B&S.

[1] Two years or for the time period listed in the respective engine or product warranty statement, whichever is greater.

Owner's Warranty Responsibilities:

- As the engine/equipment owner, you are responsible for the performance of the required maintenance listed in your owner's manual. B&S recommends that you retain all receipts covering maintenance on your engine/equipment, but B&S cannot deny warranty solely for the lack of receipts or your failure to ensure the performance of all scheduled maintenance.
- As the engine/equipment owner, you should however be aware that B&S may deny you warranty coverage if your engine/equipment or a part has failed due to abuse, neglect, improper maintenance, or unapproved modifications.
- You are responsible for presenting your engine/equipment to a B&S distribution center, servicing dealer, or other equivalent entity, as applicable, as soon as a problem exists. The warranty repairs should be completed in a reasonable amount of time, not to exceed 30 days. If you have any questions regarding your warranty rights and responsibilities, you should contact B&S at 1-800-444-7774 (in USA) or BRIGGSandSTRATTON.COM.

Briggs & Stratton Emissions Control Warranty Provisions

The following are specific provisions relative to your Emissions Control Warranty Coverage. It is in addition to the B&S engine warranty for non-regulated engines found in the Operator's Manual.

1. Warranted Emissions Parts
   Coverage under this warranty extends only to the parts listed below (the emissions control systems parts) to the extent these parts were present on the B&S engine and/or B&S supplied fuel system.

   a. Fuel Metering System
      - Cold start enrichment system (soft choke)
      - Carburetor and internal parts
      - Fuel pump
      - Fuel line, fuel line fittings, clamps
      - Fuel tank, cap and tether
      - Carbon canister

   b. Air Induction System
      - Air cleaner
      - Intake manifold
      - Purge and vent line

   c. Ignition System
      - Spark plug(s)
      - Magneto ignition system

   d. Catalyst System
      - Catalytic converter
      - Exhaust manifold
      - Air injection system or pulse value

   e. Miscellaneous Items Used in Above Systems
      - Vacuum, temperature, position, time sensitive valves and switches
      - Connectors and assemblies

2. Length of Coverage
   For a period of two years from date of original purchase [1], B&S warrants to the original purchaser and each subsequent purchaser that the engine is designed, built, and equipped so as to conform with all applicable regulations adopted by the Air Resources Board; that it is free from defects in material and workmanship that could cause the failure of a warranted part; and that it is identical in all material respects to the engine described in the

Not for Reproduction

manufacturer's application for certification. The warranty period begins on the date the engine is originally purchased.

[1] Two years or for the time period listed in the respective engine or product warranty statement, whichever is greater.

The warranty on emissions-related parts is as follows:

- Any warranted part that is not scheduled for replacement as required maintenance in the owner's manual supplied, is warranted for the warranty period stated above. If any such part fails during the period of warranty coverage, the part will be repaired or replaced by B&S at no charge to the owner. Any such part repaired or replaced under the warranty will be warranted for the remaining warranty period.
- Any warranted part that is scheduled only for regular inspection in the owner's manual supplied, is warranted for the warranty period stated above. Any such part repaired or replaced under warranty will be warranted for the remaining warranty period.
- Any warranted part that is scheduled for replacement as required maintenance in the owner's manual supplied, is warranted for the period of time prior to the first scheduled replacement point for that part. If the part fails prior to the first scheduled replacement, the part will be repaired or replaced by B&S at no charge to the owner. Any such part repaired or replaced under warranty will be warranted for the remainder of the period prior to the first scheduled replacement point for the part.
- Add on or modified parts that are not exempted by the Air Resources Board may not be used. The use of any non exempted add on or modified parts by the owner will be grounds for disallowing a warranty claim. The manufacturer will not be liable to warrant failures of warranted parts caused by the use of a non exempted add on or modified part.

3. Consequential Coverage
   Coverage shall extend to the failure of any engine components caused by the failure of any warranted emissions parts.
4. Claims and Coverage Exclusions
   Warranty claims shall be filed according to the provisions of the B&S engine warranty policy. Warranty coverage does not apply to failures of emissions parts that are not original equipment B&S parts or to parts that fail due to abuse, neglect, or improper maintenance as set forth in the B&S engine warranty policy. B&S is not liable for warranty coverage of failures of emissions parts caused by the use of add-on or modified parts.

Look For Relevant Emissions Durability Period and Air Index Information On Your Small Off-Road Engine Emissions Label

Engines that are certified to meet the California Air Resources Board (CARB) small off-road Emissions Standard must display information regarding the Emissions Durability Period and the Air Index. Briggs & Stratton makes this information available to the consumer on our emissions labels. The engine emissions label will indicate certification information.

The **Emissions Durability Period** describes the number of hours of actual running time for which the engine is certified to be emissions compliant, assuming proper maintenance in accordance with the Operating & Maintenance Instructions. The following categories are used:

Moderate:

Engine is certified to be emissions compliant for 125 hours of actual engine running time.

Intermediate:

Engine is certified to be emissions compliant for 250 hours of actual engine running time.

Extended:

Engine is certified to be emissions compliant for 500 hours of actual engine running time.

For example, a typical walk-behind lawn mower is used 20 to 25 hours per year. Therefore, the **Emissions Durability Period** of an engine with an **intermediate** rating would equate to 10 to 12 years.

Briggs & Stratton engines are certified to meet the United States Environmental Protection Agency (USEPA) Phase 2 or Phase 3 emissions standards. The Emissions Compliance Period referred to on the Emissions Compliance label indicates the number of operating hours for which the engine has been shown to meet Federal emissions requirements.

For engines less than 225 cc displacement:

Category C = 125 hours, Category B = 250 hours, Category A = 500 hours

For engines of 225 cc or more displacement:

Category C = 250 hours, Category B = 500 hours, Category A = 1000 hours

Not for Reproduction

DEALER SERVICE MANUAL

Not for Reproduction

BRIGGS & STRATTON POWER PRODUCTS GROUP, LLC
5375 NORTH MAIN STREET
MUNNSVILLE NY 13409
800 933 6175

CE